Cross-Connection Control:
Premises Isolation for Existing Multi-Tenant Facilities

Since the early 2000s, the Office of Drinking Water's Cross-Connection Control (CCC) Program has focused on premises isolation for severe and high-health hazard premises to protect public water systems from contamination via cross-connections (see Table 9 for examples—the list is not all inclusive). Our recent CCC compliance efforts have prompted us to evaluate how we interpret what constitutes premises isolation for existing non-residential multi-tenant facilities.

As a best practice, our office interprets premises isolation as the installation of appropriate backflow prevention (approved RPBA or air gap) on the service line either:

1. Adjacent to the meter; or
2. At an alternate location (usually at the point where the service line enters the building), as long as no potable water connections exist between the meter and the premises isolation backflow preventer (see graphics 1 and 2).

Current CCC rules (WAC 246-290-490) also allow for installation of the premises isolation backflow preventer at an alternate location with a connection between the meter and preventer, if the water purveyor specifically approves the installation of the connection and the connection meets the purveyor's CCC requirements. We intended for connections prior to the premises isolation assembly to be very limited in number and type—supplying only low hazard systems such as irrigation without chemical addition (see graphic 3).

Alternate CCC rule interpretations by some water systems give more latitude on premises isolation for existing non-residential multi-tenant facilities (such as strip malls or multi-story buildings) with high-health hazard tenants. Such water systems would like to apply these interpretations when they require building owners to retroactively install premises isolation backflow preventers (see graphics 4-8).

Our concerns with the alternate interpretations include:

- Water systems have no authority under drinking water rules to enter buildings to inspect plumbing.
- Local authorities having jurisdiction (AHJs) have no authority under the plumbing code to enter buildings to re-inspect plumbing once the AHJ has finalled a building.
- Building owners often make plumbing changes or change building or tenant uses without the AHJ's or water system's knowledge (don't take out plumbing permits).
- Equitable enforcement of the drinking water rules by our office for water systems serving unprotected Table 9 premises.

Definitions from WAC 246-290-010

"Premises isolation" means a method of protecting a public water system by installation of approved air gaps or approved backflow prevention assemblies at or near the service connection or alternative location acceptable to the purveyor to isolate the consumer's water system from the purveyor's distribution system.

"Severe health cross-connection hazard" means a cross-connection which could impair the quality of potable water and create an immediate, severe public health hazard through poisoning or spread of disease by contaminants from radioactive material processing plants, nuclear reactors, or wastewater treatment plants.

"High health cross-connection hazard" means a cross-connection involving any substance that could impair the quality of potable water and create an actual public health hazard through injury, poisoning, or spread of disease.

Background

The drinking water rules require water systems to isolate Table 9 premises from their distribution systems to prevent contamination of the public water system and to protect the health of consumers served by the public water system. Premises isolation preventers help ensure the quality of water delivered to public water system consumers regardless of internal plumbing changes made by building owners or tenants.

The Uniform Plumbing Code (UPC) requires building owners to install fixture protection backflow prevention assemblies (at the point of hazard) to prevent contamination of plumbing systems. The UPC-required in-premises backflow prevention assemblies help ensure the quality of water provided to occupants of buildings. The UPC doesn't require or allow for tenant isolation (area isolation) in multi-tenant facilities.

Severe and high-hazard premises pose some of the greatest health risks to public water systems and their customers. The combination of premises isolation preventers on the service line and UPC-required in-premises preventers is consistent with the multiple barrier approach to public health protection and backflow prevention industry standards.

Governing Rule:

WAC 246-290-490 (4)(b) Premises isolation requirements.

(i) The purveyor shall ensure that an approved air gap, RPBA, or RPDA is installed for premises isolation for service connections to premises posing a high health cross-connection hazard including, but not limited to, those premises listed in Table 9, except those premises identified as severe in (b)(ii) of this subsection.

WAC 246-290-490(6) Approved backflow preventer installation

(c) The purveyor shall ensure that approved backflow assemblies for premises isolation are installed at a location adjacent to the meter or property line or an alternate location acceptable to the purveyor.

(d) When premises isolation assemblies are installed at an alternate location acceptable to the purveyor, the purveyor shall ensure that there are no connections between the point of delivery from the public water system and the approved backflow assembly, unless the installation of the connection meets the purveyor's cross-connection control requirements and is specifically approved by the purveyor.

Discussion Questions:

1. How many of you currently serve non-residential, multi-tenant connections?
2. What are some of the challenges to retrofitting a multi-tenant facility?
3. Please rate the scenarios below from the most protective of public health to least protective.
4. Which (if any) of the scenarios below represents an unacceptable level of protection for your public water system?
5. Should we consider relaxing the mandatory premises isolation requirements for existing non-residential multi-tenant buildings with Table 9 tenants or facilities?
6. If so, what circumstances would justify relaxing the mandatory premises isolation requirements?

Approved Approaches to Premises Isolation

1.

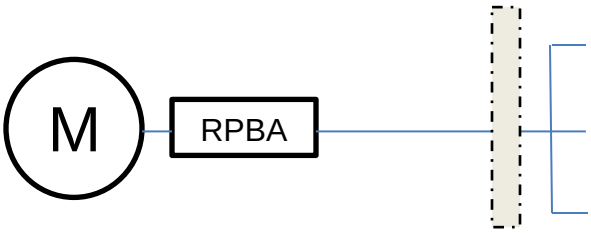

RPBA installed on the service line at a location adjacent to the meter or property line.

2.

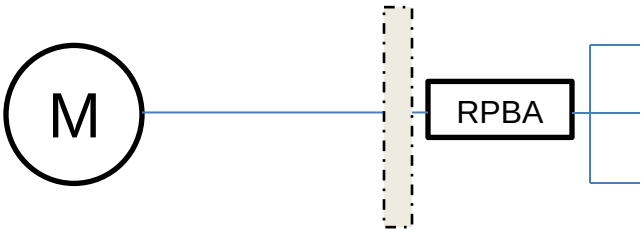

RPBA installed on service line at an alternate location acceptable to the water system. No connections between the point of delivery from the public water system and the approved backflow assembly.

3.

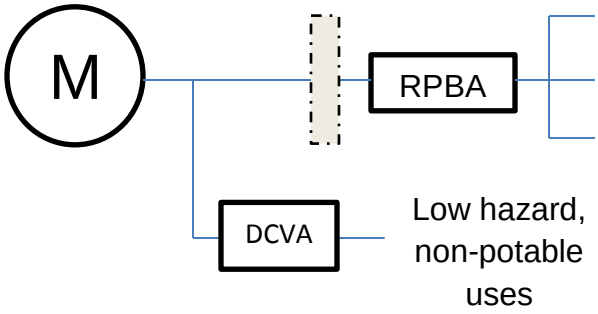

RPBA installed on service line at alternate location acceptable to the water system. Any connections between the meter and the approved RPBA must be specifically approved by the water system and must meet CCC requirements. Intent: Limit number and type of these connections.

Different “Premises Isolation” Approaches for Discussion

4.

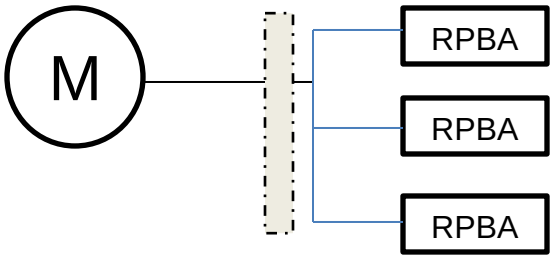

Tenant isolation. No connection between the point of delivery from the public water system and the approved backflow assemblies for all tenants.

5.

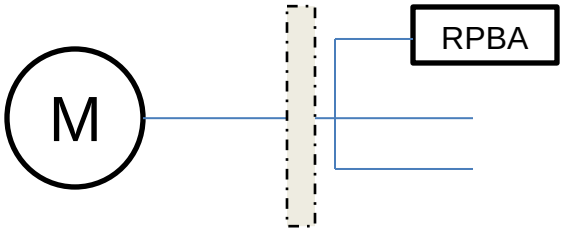

Approved backflow assembly installed where water line enters the high-hazard tenant. No backflow prevention on other tenant water lines.

6.

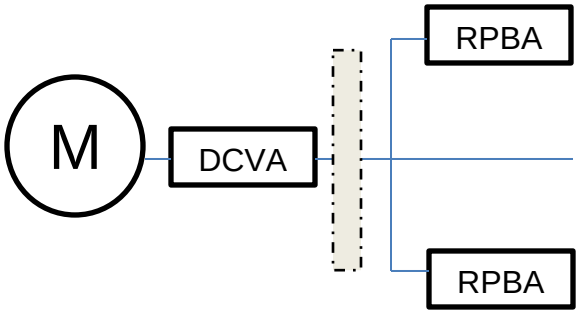

Approved DCVA installed on the service line at the meter. Approved RPBAs installed at each high-hazard tenant. No backflow prevention on other tenant water lines.

7.

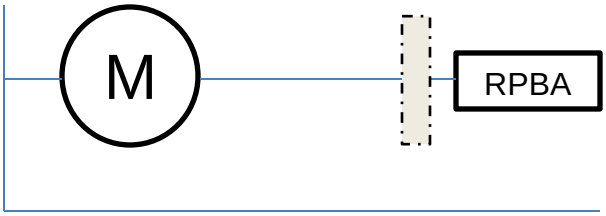

Multiple service lines to premises. Alternate location described above. Water connection directly upstream of meter for other potable water uses lacks backflow prevention.

8. Rely solely on fixture protection at the high hazard.

TABLE 9

SEVERE* AND HIGH HEALTH CROSS-CONNECTION HAZARD PREMISES REQUIRING PREMISES ISOLATION BY AG OR RPBA

Agricultural (farms and dairies)

Beverage bottling plants

Car washes

Chemical plants

Commercial laundries and dry cleaners

Premises where both reclaimed water and potable water are provided

Film processing facilities

Food processing plants

Hospitals, medical centers, nursing homes, veterinary, medical and dental clinics, and blood plasma centers

Premises with separate irrigation systems using the purveyor's water supply and with chemical addition[+]

Laboratories

Metal plating industries

Mortuaries

Petroleum processing or storage plants

Piers and docks

Radioactive material processing plants or nuclear reactors[*]

Survey access denied or restricted

Wastewater lift stations and pumping stations

Wastewater treatment plants[*]

Premises with an unapproved auxiliary water supply interconnected with the potable water supply

---

[+] For example, parks, playgrounds, golf courses, cemeteries, estates, etc.

[*] RPBAs for connections serving these premises are acceptable only when used in combination with an in-plant approved air gap; otherwise, the purveyor shall require an approved air gap at the service connection.