Subsurface Drip Systems

Interim Recommended Standards and Guidance for
Performance, Application, Design and Operation & Maintenance

Washington State Department of
Health

Washington State Department of Health
Office of Environmental Health and Safety
New Market Industrial Center
7171 Cleanwater Lane, Building 4
PO Box 47825
Olympia, WA 98504-7825

Telephone: 360.236.3062
FAX: 360.236.2261
Webpage: http://www.doh.wa.gov/ehp/ts/waste.htm

Preface

Local application of these standards:
The recommended standards contained in this document have been developed for statewide application. Regional differences may, however, result in application of this technology in a manner different than it is presented here. In some localities, greater allowances than those described here may reasonably be granted. In other localities, allowances that are provided for in this document may be restricted. In either setting, the local health officer has full authority in the application of this technology, consistent with Chapter 246-272 WAC and local jurisdictional rules. If any provision of these recommended standards is inconsistent with local jurisdictional rules, regulations, ordinances, policies, procedures, or practices, the local standards take precedence. Application of the recommended standards presented here is at the full discretion of the local health officer.

Local jurisdictional application of these recommended standards may be:

1) **Adopted as part of local rules, regulations or ordinances—**When the recommended standards, either as they are written or modified to more accurately reflect local conditions, are adopted as part of the local rules, their application is governed by local rule authority.

2) **Referred to as technical guidance in the application of the technology—**The recommended standards, either as they are written or modified to more accurately reflect local conditions, may be used locally as technical guidance.

Application of these recommended standards may occur in a manner that combines these two approaches. How these recommended standards are applied at the local jurisdictional level remains at the discretion of the local health officer and the local board of health.

The recommended standards presented here are provided in typical rule language to assist those local jurisdictions where adoption in local rules is the preferred option.

Other information and guidance is presented in text boxes with a modified font style to easily distinguish it from the recommended standards.

A Glossary of terms appears in the appendix. Throughout this document, new terms introduced that are included in the Glossary appear for the first time in *italics*.

A convenient and powerful feature of this document is available in "electronic versions" (in MS Word 2000 format only). The feature can be accessed while viewing the document on a personal computer. A number of "cross references" have been inserted throughout the text. These are electronic "links" to another part of the document (such as tables, figures, expanded discussions in the appendix, etc.), which contain information relevant to the current topic. They appear to the reader (only when viewed in the electronic version) as text in shaded areas. (In printed versions the reference will appear as ordinary text). When the reader points to the shaded area the cursor becomes a small "hand". Clicking on the shaded area immediately takes the reader to the item referred to in the document. A small blue arrow appears to the upper left of the screen while the referenced item is viewed. Clicking on the blue arrow returns the reader to the previous place in the document. This same feature can be used with the Table of Contents, where the reader can point the cursor to the page number corresponding to the topic of interest to go immediately to that section.

How this document is organized:

Standards Section:	Explanation
Performance	How this technology is expected to perform (treatment level and function);
Application	How this technology is to be applied. This section includes conditions that must be met prior to proceeding with design. Topics in this section describe the "approved" status of the technology, component listing requirements, permitting, installation, testing and inspection requirements, etc.
Design	How this technology is to be designed and constructed (includes minimum standards that must be met to obtain a permit).
Operation and Maintenance	How this technology is to be operated and maintained (includes responsibilities of various parties, recommended maintenance tasks and frequency, assurance measures, etc.)
Index	Definitions, design examples, figures and tables, specific applications, design and installation issues, and bibliography

---

Acknowledgments

The Department of Health Wastewater Management Program appreciates the contribution of many persons in the on-going development, review, and revision of the Recommended Standards and Guidance documents. The quality of this effort is much improved by the dedication, energy, and input from these persons, including:

- American Manufacturing Co.
- A. R. Rubin
- Claude Phene
- Center for Irrigation Technology
- Clearstream Wastewater Systems, Inc.
- Geoflow, Inc.
- Jerry Stonebridge
- JNM Technologies, Inc
- Lombardi and Associates
- Netafim USA
- Northwest On-Site Wastewater Training Center
- Orenco Systems, Inc.
- Puget Sound Water Quality Action Team
- Sun-Mar Corporation
- Washington State On-Site Sewage Association (WOSSA)
- Washington State On-Site Sewage Treatment Technical Review Committee (TRC)
- Waste Water Systems, Inc.
- Waste Water Technologies

Drip Standards Technical Lead:

Richard M. Benson, P.E.
Washington Department of Health ♦ 1500 W 4th Ave Suite 403 ♦ Spokane WA 99204-1656
Phone: (509) 456-6177 ♦ FAX: (509) 625-5357 ♦ e-mail: richard.benson@doh.wa.gov

TABLE OF CONTENTS

PREFACE **2**

LOCAL APPLICATION OF THESE STANDARDS: 2
ACKNOWLEDGMENTS 3
DRIP STANDARDS TECHNICAL LEAD: 3

LIST OF TABLES **5**

LIST OF FIGURES **5**

INTRODUCTION **6**

ADVANTAGES OF SUBSURFACE DRIP SYSTEMS 7
ENGINEERING CONCERNS AND TECHNICAL SOLUTIONS 7

1. PERFORMANCE STANDARDS **9**

1.1. TREATMENT LEVEL 9
1.2. OPERATIONAL PERFORMANCE 9

2. APPLICATION STANDARDS **9**

2.1. APPROVED SYSTEMS AND PRODUCTS 9
2.2. INTERIM STATUS OF THESE STANDARDS 9
2.3. PREVIOUS STANDARDS 9
2.4. PERMITTING 9
2.5. SITING CONDITIONS 9
2.6. INFLUENT CHARACTERISTICS 10
2.7. PRETREATMENT 10
2.8. INSTALLATION 10
2.9. TESTING/INSPECTION 11

3. DESIGN STANDARDS **11**

3.1. DESIGNER QUALIFICATIONS 11
3.2. SUBMITTAL 12
3.3. WASTEWATER CHARACTERIZATION 12
3.4. SITE CHARACTERIZATION 12
3.7. COMPONENTS / SIZING 13
3.8. LAYOUT / CONFIGURATION 14
3.9. FLUSHING 15
3.10. INSTALLATION 16
3.11. DOSING 16

4. OPERATION AND MAINTENANCE STANDARDS **16**

4.1. RESPONSIBILITIES 16
4.2. ROUTINE SERVICE REQUIREMENTS 17
4.3. OWNER'S/O&M MANUAL 18

APPENDIX **19**

GLOSSARY OF TERMS 19
WAC 246-272-09001(1) (MINIMUM DESIGN PACKAGE/SUBMITTAL INFORMATION) 23
TABLES 24
FIGURES 30
DESIGN EXAMPLES 34
SOIL PROPERTIES THAT AFFECT WATER MOVEMENT IN SOILS 35
ESTIMATING THE BULK DENSITY OF A SOIL SAMPLE 36
SDS IN TYPE 1 SOILS 36
FROST PROTECTION 36
RODENT PROTECTION 36

DRAINBACK AND THE CHIMNEY EFFECT 37
DRIP INSPECTION CHECKLIST 38
DRIP INDUSTRY LINKS 41
BIBLIOGRAPHY 42

LIST OF TABLES

TABLE 1 MINIMUM HORIZONTAL SEPARATIONS 24
TABLE 2 PRIMARY DRIP DESIGN PARAMETERS (RESIDENTIAL APPLICATIONS)[1] 25
TABLE 3 BULK DENSITY WHERE ROOT RESTRICTIONS OCCUR FOR VARIOUS SOIL TEXTURES 27
TABLE 4 MAXIMUM EMITTER DISCHARGE RATES BY SOIL TYPE (GALLONS PER HOUR) 27
TABLE 5 PRIMARY DRIP DESIGN PARAMETERS (NON RESIDENTIAL APPLICATIONS) 27
TABLE 6 DRIPLINE INSTALLATION METHODS 28
TABLE 7 MINIMUM PUMP CHAMBER SIZES FOR COMMERCIAL APPLICATIONS 29
TABLE 8 WASHINGTON SOIL CLASSIFICATIONS 29

LIST OF FIGURES

FIGURE 1 SHALLOW DRIP INSTALLATION TRENCH DETAIL 6
FIGURE 2 SOIL WETTING PATTERN AROUND A DRIP EMITTER WITH TIMED DOSING 7
FIGURE 3 ONE TYPE OF SUBSURFACE DRIPLINE INSTALLATION TOOL 30
FIGURE 4 LOOPED DRIP DISTRIBUTION FIELD WITH SUPPLY AND RETURN MANIFOLDS 31
FIGURE 5 CONTROL VALVE, FILTER AND PRESSURE REGULATOR IN PROTECTED VAULT* 32
FIGURE 6 END FEED SUBSURFACE DRIP SYSTEM INSTALLATION WITH FLUSH/SUB-MANIFOLD 32
FIGURE 7 AIR/VACUUM RELIEF VALVE IN VALVE BOX WITH GRAVEL SUMP 33
FIGURE 8 DRIPFIELD INSTALLATION ON MOUNDED SITE 33

Introduction

Drip irrigation has been used for many years in agricultural settings but has only been employed successfully in the United State to distribute wastewater since the late 1980s. Most of the initial experience with drip technology has been in the Southeastern United States. In the past few years the technology has garnered widespread interest nationally and there are now a number of states that are conducting research, developing standards and/or actively permitting these systems.

A subsurface drip system (*SDS*) is an efficient pressurized wastewater distribution system that can deliver small, precise doses of effluent to shallow subsurface disposal/reuse fields. SDS distribution piping is small diameter, flexible polyethylene tubing (*dripline*) with small in-line *emitters* (orifices that can discharge effluent at slow, controlled rates, usually specified in gallons per hour). Dripline can be trenched (by hand or with a trenching machine) into narrow, shallow trenches (see Figure 1 below) or plowed (with a vibratory plow or other insertion tool) directly into the soil and backfilled without gravel or *geotextile*. Typical installation depth is between 6 and 10 inches.

Figure 1 Shallow Drip Installation Trench Detail

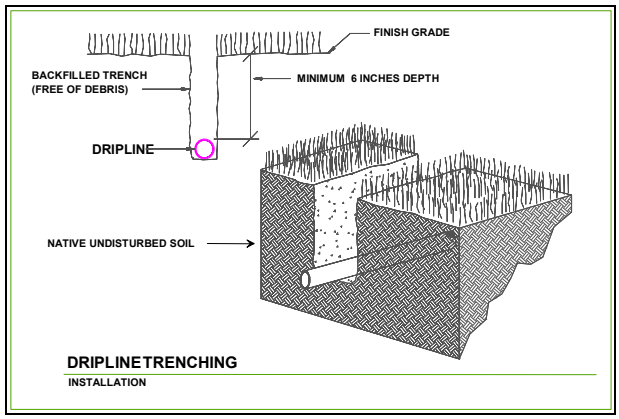

Typical dripline installations in other states have emitters spaced 2 feet apart and dripline is installed on 2-foot centers (with increased separations on sloped sites). Distribution networks are often laid out in grid patterns but flexible dripline can easily be installed to accommodate irregularly shaped sites and to run parallel to contours on sloped sites (see Figure 8 Dripfield Installation on Mounded Site). The 2-foot spacing is convenient for installation, and has been used in many areas as a basis of drip distribution system sizing. Soil application rates have been established empirically and generally assume each emitter will wet an area of four square feet. This assumption is not valid in all soil types. Research conducted for agricultural applications has shown that wetting patterns around emitters are impacted by soil/site characteristics, emitter discharge rate, and dosing regime. Site characteristics and installation methods also affect distribution patterns, particularly in fine textured soils.

Soil wetting can be managed to maximize unsaturated subsurface movement, providing better distribution and treatment. A computer-generated model of the effluent distribution pattern around an emitter is shown below. With frequent, equally spaced doses effluent spreads out over time in a pattern roughly approximating a sphere (see Figure 2 Soil Wetting Pattern Around a Drip Emitter with Timed Dosing). The size of the wetted volume depends on soil characteristics and dosing regime. The largest wetted patterns are obtained in the middle soil texture range. The wetted volume is smaller with coarse and fine textured soils. Allowable emitter and dripline spacing included in these standards are intended to account for this phenomenon.

Figure 2 Soil Wetting Pattern Around a Drip Emitter with Timed Dosing

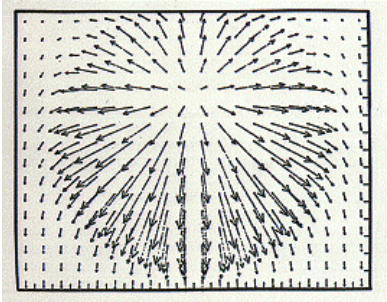

Care must be taken to apply effluent at a rate that the soil can accept it (at least in fine textured soils). Emitter discharge rates should be matched with soil conditions (slower discharge rates work best in finer textured soils) to avoid effluent surfacing during dosing.

There are several companies in the United States that manufacture dripline specifically engineered for wastewater applications but currently only two products are approved for use in Washington state: *Geoflow* and *Netafim* (see Drip Industry Links).

Dripline is manufactured with either *pressure compensating* or *turbulent flow* emitters (see Glossary of Terms) and is commonly available with emitters spaced 6 inches, 12 inches, 18 inches and 24 inches apart. Pressure compensating dripline for wastewater applications is currently available with nominal discharge rates of 0.9, 0.6 and 0.4 gallons per hour (Netafim) and 1.0 and 0.5 gallons per hour (Geoflow).

SDS can be designed to distribute either primary or *secondary* treated effluent. The level of pretreatment will determine the spacing (minimum area) and other design, maintenance and monitoring requirements.

Drip systems offer some advantages over conventional pressure systems:

Advantages of Subsurface Drip Systems

- Installation of dripline is less site-intrusive and simpler than installation of conventional gravel-filled trenches. A backhoe is not needed, nor is gravel or geotextile.
- Flexible dripline can be installed in grid or irregular patterns as needed to accommodate contours on sloped sites, irregularly shaped areas, difficult site conditions, or landscape irrigation applications.
- Small diameter dripline can be pressurized quickly resulting in very even distribution.
- Low flow rates allow for longer lateral runs than can be obtained with conventional piping.
- Shallow placement of dripline can enhance treatment by maximizing soil depth and delivering effluent to a point in the soil profile where there is typically more oxygen and organic material.
- A vegetative cover over the dripfield (usually turf) provides additional treatment and reuse through plant *evapotranspiration*.
- Slow, controlled emitter discharge combined with multiple daily dosing enhances aerobic conditions in the soil and results in frequent drainfield resting periods.

Engineering Concerns and Technical Solutions

A number of significant design, installation and management issues must be addressed in order for drip technology to be successful. Some of the challenges involved in drip system design and technical solutions are outlined in the table below:

Engineering Concerns	Technical Solutions
Small diameter drip piping installed in shallow, narrow trenches and backfilled without drain rock provides insignificant emergency storage to handle occasional flow surges.	*Pump chambers* must be sized to provide peak flow storage capacity (minimum tank volume is 1,000 gallons for residential applications) and installed in a manner that maximizes storage capability.
Small diameter dripline and emitters are vulnerable to clogging from suspended solids.	"Primary" settling and filtration in accordance with dripline manufacturer's specifications is required for all drip systems. Additional pretreatment is recommended.
Low emitter discharge rates result in low pipe flow rates. Insufficient scouring velocity is provided during dosing to prevent sludge build-up in dripline and other distribution piping.	Distribution piping must be installed in "closed-loop" networks with control valves, supply and *return manifold*s to allow for periodic line flushing (see dripline manufacturer for recommended scouring velocities). Pumps should be sized for the expected discharge rate and for periodic flushing at manufacturer recommended velocity.
Small diameter dripline and emitters are vulnerable to plugging from a buildup of bacterial slime and/or scale.	Periodic line flushing is required for all drip systems. Geoflow dripline interior wall is coated with a bactericide. Netafim implants a bactericide into emitters. Mild chlorine or acid solutions can be injected if needed (a chemical injector port is required on all systems). Chemical solutions used to scour dripline must be returned to the *primary treatment tank*.
Dripline installed directly into the soil without geotextile and subject to frequent changes in system pressure can result in a siphoning effect that plugs emitters with soil particles.	Air / vacuum release valves help prevent soil particles from being sucked into emitters and are required on all drip systems.
Shallow placement of dripline where plant roots are common and nutrient-rich discharge can invite root intrusion into emitters and result in plugging of emitters and uneven distribution.	Root intrusion can be discouraged with an approved chemical root "growth-inhibitor". Geoflow dripline is implanted with a root growth-inhibitor directly into the emitters. Netafim offers a replaceable *disk filter* cartridge with a root growth-inhibitor implanted into the disks. All drip systems must include an approved means to prevent root intrusion.
Shallow dripline installations may be susceptible to freezing.	Air/vacuum relief valves allow piping to drain between doses. Frequent dosing and continuous use of the system helps maintain soil moisture levels, which can create a barrier to frost penetration. Dripline should be installed at least 8 to 10 inches below grade if frost is a concern. All components at or near grade (valve boxes, etc.) must be insulated. In very cold climates supply and return manifolds and transport piping should be insulated or buried below the frost line and/or designed to drain to the pump chamber or a gravel-filled sump. Designers are urged to consider owner lifestyle, use patterns and local climate before recommending a drip system to clients. See Frost Protection in Appendix.
Shallow installations of dripline are more susceptible to damage from surface activities than conventional drainfields.	Owners should avoid activities that might damage the drip tubing or compact the soil, such as driving or using heavy equipment over the dripfield, digging, driving stakes into the ground, etc.
Rodents are common in some areas and can damage dripline or burrow into valve boxes.	Rodents have been reported to avoid wet soils. Frequent timed dosing helps maintain soil moisture and is required for all systems. Whenever possible drip systems should be placed into service immediately after initial testing and remain in continuous service. A 2-PPM solution of butyric acid injected into the dripline occasionally has been reported to discourage rodents. Valve boxes should be sealed as needed and underlined with gravel or bricks to discourage burrowing. Mothballs or other strong smelling substances may also discourage rodent intrusion into valve boxes. See Rodent Protection in the Appendix.
Emitter discharge rates can exceed soil capacity to absorb effluent during dosing which can result in surfacing in fine textured soils.	Emitter discharge rate must be matched to soil type (see Table 4 Maximum Emitter Discharge Rates by Soil Type (gallons per hour))with lowest available discharge rates required in Type 6 soils. Pump run times should be limited in accordance with manufacturer recommendations. (See also Drainback and the Chimney Effect in the Appendix).
Effluent can accumulate during dosing in the trench or channel where dripline is installed in fine textured soils and drain to low points in the system and possibly surface.	Carefully follow dripline manufacturers' installation instructions. Install manifolds and connect transport piping up gradient from dripline when possible or construct earthen dams at connection points to dripline. (See Drainback and the Chimney Effect in the Appendix).

The proceeding discussions underscore the importance of product/component selection and proper design, installation, maintenance and monitoring of drip systems. Fortunately, many of the routine tasks necessary to operate and maintain drip systems are easily automated. *Controllers* are readily available that can perform a range of tasks such as timed dosing, valve activation and automated flushing. More sophisticated control systems provide system performance monitoring and *telemetry* to enable an operator to monitor and control the system from a remote location with a personal computer. Prices are coming down to make these controllers and management options more competitive with conventional control panels. Specific controller recommendations and requirements depend on pretreatment level and on the size and complexity of the system.

1. Performance Standards

1.1. Treatment Level

1.1.1 A subsurface drip system (SDS), when properly sited, designed, installed, operated and maintained consistent with these recommended standards and guidance is expected to provide treatment performance equal to or better than conventional pressure distribution systems.

1.2. Operational Performance

1.2.1 SDS must be designed, installed and managed to provide to the greatest extent possible, even distribution and unsaturated subsurface flow. (Note: Systems that are consistent with these standards are expected to provide even distribution and unsaturated subsurface flow)

2. Application Standards

2.1. Approved Systems and Products

2.1.1. Subsurface drip systems (SDS) are an approved alternative on-site sewage system in the state of Washington and drip systems may be permitted by local health officers, as there are published standards.

2.1.2. Dripline must meet requirements outlined in these standards and be listed on the most current edition of the Department's List of Approved Systems and Products before it can be permitted for use with SDS. All other SDS components (filters, control valves, air-vacuum relief valves & controllers) must meet specifications of the dripline manufacturer.

2.2. Interim Status of These Standards

2.2.1. Drip systems are new to Washington State. Success of this technology will depend on responsible practices by the manufacturers, industry professionals, regulators and system owners. These standards are labeled "interim" because the "Approved" status of the technology and these standards are subject to change depending on our experience.

2.3. Previous Standards

2.3.1. The standards outlined in this document supersede and replace the drip standards in the Department's Recommended Standards and Guidance for Water Conserving On-Site Wastewater Treatment Systems (April 1999). Subsurface drip systems may still be used to distribute *greywater* exclusively but must conform to current standards.

2.4. Permitting

2.4.1. Permitting and installation of SDS are subject to state and local code.

2.4.2. An installation permit and (where required) an operational permit must be obtained from the local health jurisdiction prior to installation and use.

2.4.3. To obtain a permit designers must submit an application acceptable to the local health jurisdiction addressing at a minimum items outlined in WAC 246-272-09001(1) (Minimum Design Package/Submittal Information).

2.5. Siting Conditions

2.5.1. A soil /site evaluation is required in accordance with state code (see WAC 246-272-09001(1) to determine site suitability for SDS.

2.5.2. SDS may be located wherever pressure distribution is allowed or required.

2.5.3. The level of pretreatment determines the minimum *vertical separation* requirements in accordance with WAC 246-272 (at least 2 feet of unsaturated, undisturbed soil beneath the installed dripline is required where only minimum pretreatment is provided.

2.5.4. To obtain a permit for new construction the designer must demonstrate that sufficient suitable area exists to construct 100% of the primary and reserve dripfields. For single-family residences the minimum area that must be set aside is based on the "minimum dripfield area" listed in Table 2 under "*Minimum Pretreatment*". Minimum constructed dripfield area depends on pretreatment (see Table 2 Primary Drip Design Parameters (residential applications)1). Primary and reserve area requirements for multi family and other commercial applications can be determined by applying the formulas in Table 5 Primary Drip Design Parameters (non residential applications)[1].

2.5.5. Minimum horizontal separations from SDS components are consistent with separations to conventional on-site system components identified in state code (see Table 1 in Appendix).

(NOTE: For SDS "edge of disposal component" means the location of the nearest dripline to the item requiring the setback.

2.6. Influent Characteristics

2.6.1. SDS may be utilized to distribute either greywater or combined wastewater (combined wastewater means greywater and *blackwater* – see Glossary of Terms).

2.6.2. SDS designed and installed in accordance with manufacturer's recommendations and consistent with these standards are suitable for treatment and disposal of *residential sewage* (see Glossary of Terms).

2.7. Pretreatment

2.7.1. The site and soil conditions may determine the degree of pretreatment necessary. Different SDS products may require different levels of pre-treatment. Follow the manufacturers' recommendations in conjunction with the site-induced pre-treatment requirements.

2.7.2. For "non-residential" applications pretreatment must be provided to assure effluent delivered to the drip system is treated to "residential strength" or better.

Different levels of pretreatment may be obtained by the use of a septic tank, an aerobic treatment unit, or a sand filter (see Glossary of Terms*) system along with dripline manufacturer's specified filtration.*

2.7.3. The minimum pretreatment required for SDS where at least two feet of vertical separation is available below the installed dripline depth is "residential sewage" septic tank effluent with filtration provided in accordance with these standards and dripline manufacturer's specifications.

"Residential sewage septic tank effluent" means residential sewage that has received pretreatment at least equal to that provided in a conventional two-compartment septic tank. Actual values for septic tank effluent parameters vary with lifestyle, household product and water usage but reasonable estimates are: $BOD_5 \leq 200$ mg/L; TSS $\leq$ 125 mg/L and Grease and Oils $\leq$ 25 mg/L. Additional filtration in accordance with these standards and manufacturer's recommendations must be provided. Manufacturer's recommendations vary but generally filtration of particles larger than 100 - 120 microns is required.

2.8. Installation

2.8.1. Only on-site system installers approved by the local health jurisdiction may install SDS. The installer must obtain specific training in SDS installation prior to offering to install SDS. Installation instructions and recommendations vary from one manufacturer to

another. Installation knowledge and skill may be product-specific. Installers are responsible for obtaining proper training before attempting to install SDS.

Training in SDS installation may be obtained from the manufacturer, experienced practitioners or from the Northwest On-Site Wastewater Training Center ("NOWTC" - see Glossary of Terms).

2.8.2. Dripline may be installed using any of the following methods: Trenching (by hand or with a machine), vibratory plow or other approved insertion tool. Installation techniques that pull or stretch dripline are prohibited. (See Table 6 Dripline Installation Methods) in the Appendix. See also the discussion on Drainback and the Chimney Effect in the Appendix..

2.9. Testing/Inspection

2.9.1. All SDS must be inspected prior to use in accordance with state and local rules (by either the local health officer or a qualified designer – see WAC 246-272-14501).

2.9.2. SDS inspectors should be familiar with these standards and receive training in the design and operational concepts of SDS prior to inspecting SDS. Local Health Jurisdictions are responsible for assuring that inspectors receive proper training.

2.9.3. In lieu of a conventional pressure test, installers must perform initial hydraulic and pressure tests of the distribution system, verify that the system is watertight, record baseline flow-rate and pressure information and provide it to the designer and owner; and also to the inspector (if required). Inspectors may require the hydraulic test to be performed in their presence and may also require baseline performance information at the time of the inspection. Installers are advised to follow manufacturer's recommendations for specific start-up and testing procedures.

Gopher damage to dripline (from chewing) has been reported to be a problem in some areas. Where gophers are present, installers are advised to start-up and test the system just prior to putting the system into continuous service. This is because gophers have been observed to avoid areas where the soil is continuously moist, but may be attracted when the system is not in service (soil is allowed to dry).

3. Design Standards

NOTE: Unless otherwise noted below, design standards for components of SDS including septic tanks, dosing / pump chambers, electrical components and controls are the same as outlined in the Department's publication Recommended Standards and Guidance for Pressure Distribution April, 1999.

3.1. Designer Qualifications

3.1.1. Only licensed on-site sewage system designers or licensed engineers may design SDS. SDS designers must have specific training in the design and operational concepts of SDS. Manufacturers' recommendations and design criteria vary from one manufacturer to another. Design knowledge and skill may be product-specific. **Designers are responsible for obtaining appropriate training before attempting to design SDS**.

Effective July 1, 2001 only Licensed Engineers; Licensed On-site Designers or holders of a valid Designer's Practice Permit may design on-site sewage systems in Washington State. Practice permit holders may design only in the counties where they are authorized. Licensed Engineers and On-Site System Designers in good standing may practice in any county in the state. After June 30, 2003 only Licensed Engineers and Licensed On-site Designers may design on-site systems. Licensees must meet minimum education and experience requirements and pass a written exam administered by the Department of Licensing. For access to lists of licensed engineers and on-site designers and information about licensing requirements see the DOL website: http://www.dol.wa.gov/engineers/onsitefront.htm

All SDS designers and inspectors are encouraged to attend SDS design, installation, operation and maintenance training that will be offered by the manufacturers, NOWTC and DOH after the effective date of these standards.

3.2. Submittal

Owners or Designers of SDS must submit to the local health officer a design package for approval consistent with state and local code {see **WAC 246-272-09001(1)** in Appendix for state code} and these Design Standards. The local health officer may require the following additional information (Items 2, 3 and 4 are required after construction):

3.2.1. Management Plan (Identify the service provider and outline management responsibilities, including compliance with any local O&M program requirements).

3.2.2. O&M Manual with As-built (see Owner's/O&M Manual requirements in Operation and Maintenance Standards)

3.2.3. Construction Certification (see suggested certification form in Appendix)

3.3. Wastewater Characterization

3.3.1. Designers of SDS must characterize expected waste strength and flows. Only "residential sewage" (see Glossary of Terms) or more highly treated wastewater is suitable for SDS.

3.3.2. For residential applications the minimum information that must be submitted on permit applications is the design flow, based on state and local rules.

3.3.3. For non-residential applications local health jurisdictions may require any or all of the following information:

- a Type of facility to be served by the on-site system (i.e. residence, restaurant, etc.)
- b Peak and average daily design flows
- c Use patterns (daily, weekly, monthly and / or seasonal)
- d Waste strength (using accepted reference values or sampling for BOD_5, TSS, G&O, etc.)
- e Modification (identify any options to reduce design requirements by modifying the waste stream to reduce flows, strength, etc.)

3.3.4. Where waste strength is characterized as higher than residential sewage, the designer must propose an approved pretreatment system and demonstrate to the satisfaction of the local health officer that pretreatment will reduce strength to residential sewage or better.

3.4. Site Characterization

Soil and site characteristics that impact design, location or installation of SDS must be identified. At a minimum the site characterization must include descriptions of the following:

3.4.1. Soil (textural class, structure, depth, confining layers, etc.)

3.4.2. Topography (landscape position, drainage, slope, etc.

3.4.3. Landscape (vegetative cover, impermeable surfaces, etc.)

3.4.4. Location (where SDS components are to be located in relation to property lines, structures, utilities, easements, surface water, wells, etc.

3.4.5. Control (address how the service provider can access system for maintenance, how property use can be controlled to prevent unauthorized access to components, etc.)

3.5. Pre-Filter

SDS with *minimum pretreatment* only (see Glossary of Terms) must include an effluent "pre-filter" installed at the outlet of the septic tank. An access riser is required over the pre-filter, so the effluent filter can be easily accessed for cleaning.

3.6. Materials

3.6.1. All SDS materials must be warranted by the manufacturer for use with wastewater and resistant to plugging from solids, bacterial slime and root intrusion.

3.6.2. All transport piping, supply and return manifolds and fittings must be schedule 40 or better.

3.6.3. Fittings used to join dripline to the distribution and flush manifolds must be in accordance with manufacturer's recommendations. Both compression and barb fittings may be specified, depending on the manufacturer recommendations and system operating pressure.

3.6.4. All dripline must be color coded (purple or pantone) or otherwise marked in a manner acceptable to the local health officer to identify the (non-potable) water source.

Because SDS piping has historically been associated with irrigation applications it could be misidentified in the yard and there is an increased potential for direct human contact with effluent. Purple (or pantone 522) coloring is a nationally recognized convention for identifying reuse applications.

3.7. Components / Sizing

The following components (see Glossary of Terms) are required on all SDS:

3.7.1. Dripline with pressure compensating emitters (must be on the Department's *Approved List*) with maximum rated discharge as shown in Table 4.

3.7.2. Filters (disk or fine-*mesh* screen type in accordance with dripline manufacturer's specifications).

a. Designers must specify the filter that is recommended by the manufacturer of the dripline.

b. The manufacturer must warrant filters for use with wastewater (resistant to corrosion).

c. All filters must be sized to operate at a flow rate at least equal to the maximum design discharge rate of the system. Filter backwash must be included in calculating the maximum discharge rate (where applicable).

d. System flush volume and velocity must be in accordance with filter specifications.

e. Filters may require backwashing in accordance with manufacturer's recommendations or may be the continuously self-cleaning type.

f. All SDS filters must be readily accessible for inspection and servicing.

g. An effluent "pre-filter" is required at the septic tank outlet on all systems with only minimum pretreatment.

The most common effluent filter available is 1/8-inch mesh but pre-filters are available in 1/16 and 1/32 inch mesh. Finer mesh filters (1/16-inch mesh or finer) are recommended for use with SDS.

3.7.3. Air/Vacuum Relief Valve(s) must be installed at the high point of each distribution sector. All valves must be installed in a valve box with access to grade and include a gravel sump (see Figure 7 Air/Vacuum Relief Valve in Valve Box with Gravel Sump).

3.7.4. Supply and Return Manifolds to distribute effluent to dripline and to collect filter backwash and line-flushing debris and return it to the primary treatment unit. Where only minimum pre-treatment is provided, line flushing and filter backwashing must be automated.

3.7.5. Flow Meter or other means to monitor flow. Flow meters must be installed in a readily accessible location for reading and servicing. Flow meters must be warranted by the manufacturer for use with wastewater and be accurate within the expected flow range of the installed system.

3.7.6. Chemical Injector Port to facilitate future connection of a chemical injector pump if/when needed. A mild acid solution can be injected to help scour scale accumulations and a mild chlorine solution can combat bacterial slime accumulations. If chemicals are injected, the flushed liquid must be returned to the primary treatment tank.

Occasional injections of a weak acid solution into the distribution network may be needed to break up scale deposits where domestic water has excessive mineral content. Injections of mild chlorine solution may help scour bacterial slime accumulations inside drip tubing where needed. Chemicals should be introduced only during the flushing process and flush water returned to the primary treatment device or septic tank.

3.7.7. Controller capable of timed dosing is required for all systems. Additional controller functions such as automatic line/filter flushing are recommended for all systems and required where only minimum pretreatment is provided and for all commercial applications. Automatic control of actuated valves is required for systems with multiple distribution zones.

3.7.8. Pump chamber, minimum volume is 1000 gallons for single-family residential applications. For all other applications the minimum pump chamber size depends on design flow (see Table 7 Minimum Pump Chamber Sizes for Commercial Applications). Pump chambers must be installed in a manner that maximizes available storage.

Drip systems provide little emergency storage capacity in the small diameter tubing and narrow, shallow trenches so larger pump chambers are needed to provide some emergency storage. Pump chambers may be installed at lower elevations than the septic tank to maximize available storage.

3.7.9. All SDS must include a USDA-approved "root growth inhibitor" incorporated into the material during the manufacturing process to prevent root intrusion into emitters.

Dripline installations are usually shallow and emitters can become clogged by roots from surface vegetation seeking water and/or nutrients. To address this concern one manufacturer provides dripline with a root growth inhibitor incorporated into the emitters during the manufacturing process and another manufacturer offers a filter with a root growth inhibitor incorporated into a replaceable disk filter cartridge. Either of these components are acceptable means of preventing root intrusion. See dripline manufacturer for the estimated duration that their products provide this protection.

3.7.10. Valves

a. Must be readily accessible for inspection and/or service (such as in a valve box with access to grade).

b. Control valves used for system flushing and zone distribution must operate automatically where minimum pretreatment is provided.

3.8. Layout / Configuration

3.8.1. Minimum area requirements for the constructed primary drainfield (single family residential applications) depend on pretreatment (see Table 2 Primary Drip Design Parameters (residential applications)[1]. Minimum area requirements for commercial applications can be determined by applying the appropriate value in Table 5 Primary Drip Design Parameters (non residential applications)[1]).

3.8.2. For new construction, regardless of pretreatment, the total area set aside for primary and reserve drainfields must be no less than twice the applicable minimum area listed in Table 2 under "Minimum Pretreatment" or twice the area determined by using the formula in Table 5 for commercial applications.

3.8.3. Where soils are compacted or cemented the local health officer may require a bulk density test. If results show soil density approaches (within 95% of) the values in Table 3 Bulk Density Where Root Restrictions Occur for Various Soil Textures, the health officer may require additional emitters or greater spacing (area) than values shown in Table 2.

3.8.4. For systems with 1000 emitters or more or for any system installed in Type 6 soil, at least 2 separate distribution sectors (zones) are required. Dosing must be automatically alternated between each sector.

Alternating doses between zones may be accomplished with a distributing valve (see Glossary) or with an actuated valve and a controller. The control panel may require modifications to accommodate additional functions (additional logic unit, breakers, transformer, larger enclosure, etc.)

3.8.5. A ground cover (turf or other appropriate landscaping) must be planted over the dripfield after installation to prevent erosion of the dripfield area.

3.8.6. Dripline

a. Must be installed as level as possible and parallel to contours on sloped sites.

b. Minimum installation depth is 6 inches beneath grade (in moderate climates). Where frost is a concern, recommended minimum installed depth is 8 to 10 inches. Dripline must be installed in original, undisturbed soil (or in ASTM C-33 sand where allowed – see footnote number 2 in Table 2).

c. Minimum emitter spacing is 12 inches for all soil types (6 inches in type 1 and 2 soils with pretreatment meeting all 3 parameters of *Treatment Standard 2* – see Table 2).

d. Minimum dripline spacing depends on soil type (see Table 2). Dripline spacing must be increased by one foot from the values in Table 2 on slopes $\geq$ 20% (see footnote number 3 below Table 2).

e. The minimum number of emitters for residential applications is listed in Table 2.

f. Maximum daily discharge per emitter depends on soil type (see Table 2)

g. Maximum length of each run of dripline must be in accordance with manufacturer's specifications to insure equal distribution (maximum allowable flow variance between any two emitters in a distribution zone is 10%)

Manufacturer recommended maximum dripline runs are generally much longer than maximum lateral lengths allowed for conventional pressure systems. However, short dripline runs (<100 feet) charge more quickly during dosing and are recommended to assure even distribution.

h. Maximum elevation difference between any two emitters in the same distribution field is 5 feet.

The discharge from pressure compensating emitters is relatively constant even when emitter elevations vary. However, air/vacuum valves allow dripline to drain between doses so discharge tends over time to be greater at low points in the system, which can result in "spot loading" over time. For this reason dripline should always be installed as level as possible.

i. SDS must be designed and installed to prevent low-level drainage (see Drainback and the Chimney Effect in Appendix) of effluent along dripline or manifolds (e.g. install manifolds up gradient from dripline, place tubing 4 inches lower than supply or return line or use earth dams, check valves, etc.).

3.9. Flushing

3.9.1 All SDS must include means to backwash filters and flush dripline/manifolds

3.9.2 Both supply and return manifolds are required on all systems.

3.9.3 Filter backwash and dripline flush must be automatic where minimum pretreatment is provided. Automated filter backwash and dripline flushing is recommended for all drip systems.
3.9.4 Manual valves for control of backwash/flushing are only allowed with pretreatment to NSF standard 40 or better.
3.9.5 Filter backwash / line flush debris must be returned to primary treatment plant. The return line must slope (1 to 2 % recommended) towards the septic tank or primary treatment unit.
3.9.6 Hose bibs are not allowed for use as a flushing component (to prevent cross connection).

3.10. Installation

Design of SDS must include specific installation instructions including the following:

3.10.1. Material Specifications
3.10.2. Pre-Construction issues such as responsibilities for permits, locating site utilities, protection of drip field area during construction, authorization for changes, etc.
3.10.3. Construction Methods: include detailed instructions for site/soil preparation & installation (see Table 6).
3.10.4. Component Testing: Identify components to be tested & methods to be used, etc.
3.10.5. Final Grading/Landscaping requirements
3.10.6. Documentation such as providing manufacturer cut sheets for electrical and mechanical components, as-built drawing, etc.

3.11. Dosing

3.11.1 Timed dosing is required on all systems.
3.11.2 A minimum number of 12 equally spaced doses per day is required in all soil types. (See Table 2).
3.11.3 Means must be provided to track and verify dosing such as can be accomplished with a digital control panel, pump elapsed time meters (ETMs) or event counters, etc.

4. Operation and Maintenance Standards

4.1. Responsibilities

Outlined below are responsibilities of the various parties associated with SDS:

4.1.1.Developer:
a. Contract with a qualified service provider for an initial two-year service policy with the provision that any new owner assumes related obligations upon transfer of ownership.
b. All responsibilities outlined in section 4.1.2. if the developer owns the system.
c. Notify the local health officer within 10 days of any transfer of ownership of the SDS

4.1.2 SDS owners:
a. The homeowner is ultimately responsible for his/her own sewage and on-site system. SDS owners must:
b. Provide on-going competent management by securing an on-going service contract with a qualified provider. Examples of qualified service providers are individuals who have received adequate training or are certified by the manufacturer in maintenance of SDS. Qualified providers may be any of the following: SDS designers, installers, maintenance specialists, dripline or pretreatment manufacturers or their authorized representatives
c. Assure that the service provider can access the system as needed for maintenance (provide easements, written permissions, etc.)
d. Obtain and/or renew permits as needed.

e. Retain a system Owner's Manual (see section 4.3 - Owner's/O&M Manual) in good and updated condition and make it available when needed by the service provider.
f. Maintain adequate records of repairs, maintenance activities, operational information, etc. and make them available to the service provider as needed.
g. Owners must comply with local maintenance reporting requirements (if any).
h. Notify the local health jurisdiction within 10 days of change of ownership.

4.1.3 Manufacturers must:

a. Provide or make available product installation instructions or training to installers.
b. Provide a limited warranty for SDS products or components
c. Assure ongoing availability of repair parts.
d. Provide or make available an Owner's Manual including at a minimum a system process description, list of components, recommended maintenance tasks and frequencies.
e. Assist the Department of Health in providing training/instruction for designers, installers, and service providers.

4.1.4 SDS Service Providers:

a. Only qualified SDS Service providers may contract to maintain SDS. Knowledge and skill level required is product specific and service providers are responsible for obtaining proper training.
b. Provide homeowner with a service contract including at a minimum terms for:
   - Initial Service (including a service visit within 30 days after startup)
   - Renewable Terms
   - *Routine Servicing*
   - Emergency/Repairs
   - Response Time
   - Record Keeping
   - Termination Notice

4.1.5.Local Health Officers:

a. May require a copy of a signed maintenance contract prior to issuing a permit.
b. Must obtaining proper training in SDS design and inspection
c. Have authority for SDS Plan Approval / Inspections
d. May issue and track operating permits in accordance with local rules
e. Are responsible for enforcement of these standards and any applicable rules.

4.2. Routine Service Requirements

4.2.1 Specific Maintenance Tasks

Recommended maintenance tasks depend on the manufacturer and specific components of the system. The manufacturer should be consulted and maintenance performed in accordance with manufacturers recommendations. Outlined below are suggested tasks specific to the subsurface drip components and may be required with more frequency where automated flushing is not provided:

a. Inspect and service filters in accordance with manufacturer's recommendations.
b. Open field flush valves for each sector, manually turn on the pump and flush the system for approximately 5 minutes.
c. Close the field flush valve and check system pressure (compare to baseline data collected during initial start-up and testing). If pressure or flow rates are not the same as baseline data the dripline may require additional maintenance such as flushing with mild chlorine or acid solution. (Always consult with the dripline manufacturer before performing this task).
d. Check vacuum breakers (air vacuum relief valves) and check for proper operation.
e. Be sure and reset controller to "automatic" mode.

f. Inspect and clean as needed field and filter flush valves.
g. Check dripfield for ponding or soggy conditions. (Note: If this condition is observed please report any problems to the local health officer. The Department of Health is seeking drip system performance data to assess these standards).

4.2.2 Frequency/Schedule

a. The service provider must perform an initial inspection and system check within 30 days of installation and start-up of the system.
b. Service frequency must be in accordance with manufacturer's recommendations. If the service provider also provides service on a pretreatment component such as an aerobic treatment unit, the frequency of service visits can be the same as service scheduled for that unit. Generally, where secondary pretreatment is provided at least two service visits per year are recommended. For systems with minimum pre-treatment service frequency must be in accordance with manufacturers recommendations but at least 4 equally spaced (quarterly) inspections/service visits per year are recommended.

4.3. Owner's/O&M Manual

The designer must prepare and provide to owner an Owner's manual addressing the following items:

4.3.1 Ownership and management details and responsibilities
4.3.2 Contact information for the system designer, installer, component manufacturer, local health officer and service provider
4.3.3 System Description including a process diagram
4.3.4 List of components and a description of their function
4.3.5 Service Contract information
4.3.6 Routine Maintenance Tasks/Schedule
4.3.7 Trouble-Shooting Repair guide
4.3.8 Maintenance Log/Reporting Forms
4.3.9 Safety concerns
4.3.10 Mfg. Cut Sheets of all electrical and mechanical components
4.3.11 As-Built drawing

Appendix

Glossary of Terms

Term	Meaning / Description
Air/Vacuum Relief Valve	A valve that automatically lets air out of or into a liquid-carrying pipe (provides vacuum or air relief) as needed in response to changes in system pressure.
Alternative System	An on-site sewage system other than a conventional gravity system or conventional pressure distribution system. Properly and maintained alternative systems provide equivalent or enhanced treatment performance as compared to conventional gravity systems.
Approved List	"List of Approved Systems and Products", developed annually and maintained by the department and containing the following: (a) List of proprietary devices approved by the department; (b) List of specific systems meeting Treatment Standard 1 and Treatment Standard 2; (c) List of experimental systems approved by the department; (d) List of septic tanks, pump chambers, and holding tanks approved by the department.
Automated Controller	A controller capable of regulating filter backwash, line flushing and distribution zone sequencing in addition to timed dosing.
Backwash	The process of flow reversal to clean a filter and to restore it to the normal clean condition for filtering with a minimum resistance to flow through the media or screen.
Blackwater	Water that is flushed from toilets and urinals that contains human waste.
Biochemical Oxygen Demand (BOD_5)	An index of the amount of oxygen that will be consumed by the decomposition of organic matter in a wastewater. This is the result of a laboratory analysis that consists of measuring the initial dissolved oxygen concentration, incubating the sample for five days at 68° F, then measuring the final dissolved oxygen. The difference in dissolved oxygen concentration corrected for the initial dilution and sample volume is called the BOD_5. The BOD_5 test is one of the commonly used indicators of wastewater strength.
$CBOD_5$	A laboratory test commonly used to measure dissolved oxygen used by microorganisms in the biochemical oxidation of organic matter in wastewater. This test is similar to the widely used BOD_5 test only modified (by pretreatment of the sample with inhibitory agents) to eliminate the interference caused by nitrifying bacteria.
Conventional Pressure Distribution System	An on-site sewage system consisting of a septic tank and a subsurface soil absorption system with pressure distribution of the effluent.
Disposal Component	A subsurface absorption system (SSAS) or other soil absorption system receiving septic tank or other pretreatment device and transmitting it into original, undisturbed soil.
Disk filter	A type of filter that utilizes a series of grooved rings that overlay each other to form a network of very small openings to trap contaminants.
Distributing Valve	A valve that distributes flow to multiple drainfield laterals, zones or locations by automatically rotating upon each pump cycle.
Diversion Valve	A valve that diverts flow exclusively to one disposal component providing a long-term drying period of another disposal component.
Dosing Tank / Chamber	A tank which collects treated effluent and periodically discharges it into another treatment / disposal component, depending upon the needs and design of the particular on-site sewage system.
Drainfield (Conventional)	An area in which perforated piping is laid in drain rock-packed trenches, or excavations (seepage beds) for the purpose of distributing the effluent from a wastewater treatment unit into original, undisturbed soil.
Dripline	Flexible small diameter polyethylene tubing containing small diameter openings called emitters.
Effluent	Liquid which is discharged from an on-site sewage system component, such as a septic tank (septic tank effluent) or sand filter (sand filter effluent).
Emitters	Small diameter openings in dripline that can dissipate pressure and allow a slow, controlled discharge (rated in gallons per hour)
Evapotranspiration	The loss of moisture from the soil due to a combination of the processes of evaporation and transpiration from the plants growing in the soil. Evapotranspiration varies with soil type, landscape position, local climate and plant types.

Term	Meaning / Description
Failure	A condition of an on-site sewage system that threatens the public health by inadequately treating sewage or creating a potential for direct or indirect contact between sewage and the public. Examples of failure include: (a) sewage on the surface of the ground; (b) sewage backing up into a structure caused by slow absorption of septic tank effluent; (c) sewage leaking from a septic tank, pump chamber, holding tank, or collection system; (d) cesspool or seepage pits where evidence of ground water or surface water quality degradation exists; or (e) inadequately treated effluent contaminating ground water or surface water. (f) noncompliance with standards stipulated on the permit.
Fats, Oils & Greases (Fog)	FOG is a measure of the amount of fatty matter from animal and vegetable sources and hydrocarbons from petroleum products and waxes, such as from lotions, shampoos, and tanning oils. High levels of fats, oils and greases in the wastewater stream may interfere with wastewater treatment efficiency.
Filter	A device or structure for removing suspended solid or colloidal material from wastewater.
Geotextile	A permeable textile used with foundations, soil, rock, earth, an integral part of a human-made project, structure, or system, and which serves to lessen the movement of fine soil particles.
Greywater	Wastewater having the consistency and strength of residential domestic type wastewater. Greywater includes wastewater from sinks, showers and laundry fixtures but does not include toilet or urinal waters.
Infiltrative Surface	In drainfields, the drain rock-original soil interface at the bottom of the trench; in mound systems, the gravel-mound sand and the sand-original soil interfaces; in sand-lined trenches/beds (sand filter), the gravel-sand interface and the sand-original soil interface at the bottom of the trench or bed.
Influent	Wastewater, partially or completely treated, or in its natural state (raw wastewater), flowing into a reservoir, tank, treatment unit, or disposal unit.
Mesh	A parameter used to describe the size of screen openings or the size of particles that can be passed through a screen, usually in terms of the number of openings occurring per linear inch.
Minimum Pretreatment	For SDS, minimum pretreatment means septic tank effluent AND filtration in accordance with manufacturer's recommendations (ranges from 100 to 120 micron particle filtration)
NSF Standard 40—	A wastewater treatment standard developed by the National Sanitation Foundation for Individual Aerobic Treatment Units. For "Class 1 Systems" (the higher of 2 standards), $CBOD_5$: 30-day average = no more than 25 mg/l; 7-day average = no more than 40 mg/l.; TSS: 30-day average = no more than 30 mg/l; 7-day average = no more than 45 mg/l
NOWTC	Northwest On-Site Wastewater Training Center located on the W.S.U. Extension Center campus in Puyallup, Washington. For information about the center, training curriculum & schedules, contact Dave Lenning (Training Center Director) at (360) 455-8880 or by e-mail at dlenning@prodigy.net
On-Site Sewage System	An integrated arrangement of components for a residence, building, industrial establishment or other places not connected to a public sewer system which: (a) Convey, store, treat, and/or provide subsurface soil treatment and disposal on the property where it originates, upon adjacent or nearby property; and (b) Includes piping, treatment devices, other accessories, and soil underlying the disposal component of the initial and reserve areas.
Particle Size	The diameter of a soil or sand particle, usually measured by sedimentation or sieving.
Pressure Compensating Emitters	Drip emitters that allow a constant discharge over a wide range of applied pressures. A *pressure regulator* is not needed with this type of emitter when system pressure is maintained (determined by pump selection) within the range recommended by the manufacturer.
Pressure Distribution	A system of small diameter pipes that apply effluent fairly uniformly over the entire absorption area, as described in the "Recommended Standards and Guidance for Pressure Distribution Systems" by the Washington State Department of Health. (See Conventional Pressure Distribution System.)
Pressure Regulator:	A device used to regulate and maintain pressure within a specified range in a piping system. Required to control discharge with *turbulent flow* emitters.

Term	Meaning / Description
Primary Treatment Tank.	A passive method of treating wastewater that involves physical processes such as screening and sedimentation to remove floating and settling solids such as occurs in a septic
Pump Chamber	A tank or compartment following the septic tank or other pretreatment process which contains a pump, floats and volume for storage of effluent. In timer-controlled pressure distribution systems, this is frequently called a "surge tank" or "equalization tank." If a siphon is used, in lieu of a pump, this is called a "siphon chamber."
Raw Wastewater	Wastewater before it receives any treatment.
Residential Sewage	Sewage having the consistency and strength typical of wastewater from domestic households.
Restrictive Layer	A stratum impeding the vertical movement of water, air, and growth of plant roots, such as hardpan, clay pan, fragipan, caliche, some compacted soils, bedrock and unstructured clay soils.
Return Manifold	A collection manifold or the piping that returns liquid and debris to the primary treatment tank during system flushes.
Routine Servicing	Servicing all system components as needed, including product manufacturer's requirements / recommendations for service.
Sand Filter	A biological and physical wastewater treatment component consisting (generally) of an under drained bed of sand to which pre-treated effluent is periodically applied. Filtrate collected by the under drains is then disposed of by an approved soil absorption system. Pretreatment can be provided by a septic tank or another approved treatment component. An Intermittent Sand Filter is a sand filter in which pre-treated wastewater is applied periodically providing intermittent periods of wastewater application, followed by periods of drying and oxygenation of the filter bed. A Recirculating Sand (Gravel) Filter is a sand (gravel) filter which processes liquid waste by mixing filtrate with incoming septic tank effluent and recirculating it several times through the filter media before discharging to a final treatment/disposal unit. Sand-Lined Drainfield Trench is a combination of a pressure distribution drainfield and an intermittent sand filter consisting of a two-foot layer of intermittent sand filter media placed directly below the drain rock layer in the pressure distribution drainfield trench. A Bottomless Sand Filter is a special case of a sand-lined drainfield trench installed in a containment vessel and is usually used to utilize more suitable soils high in the soil profile for disposal.
SDS	An acronym for Subsurface Drip System(s)
Secondary treatment	A method of treating wastewater in which biological and chemical processes are used to remove most of the organic matter**.**
Septic Tank	A water tight pretreatment receptacle receiving sewage discharge from a building sewer, designed and constructed to permit separation of settle able and floating solids from the liquid, detention and anaerobic/facultative digestion of organic matter, prior to discharge of the liquid.
Service Interval	The time period between planned site visits to perform various system monitoring functions such as checking equipment, renewing depleted disinfectant chemical supply, collecting samples. The service intervals may be specified by contracts, operation plans, or local health permits.
Sewage	Any urine, feces, and the water carrying human wastes including kitchen, bath, and laundry wastes from residences, building, industrial establishments or other places. For the purposes of this document, “sewage” is generally synonymous with domestic wastewater. Also see "residential sewage."
Soil Type 1A	Very gravelly coarse sands or coarser, extremely gravelly soils.
Solenoid Valve	An electric valve actuated by a solenoid, used for controlling the flow of liquid in pipes.
Suitable Soil	Original, undisturbed soil of types 1B through 6.
Supply Manifold	A distribution manifold or the piping that delivers effluent to dripline segments (laterals).
Telemetry System —	Transmits system performance information measured by sensors to a remote location by means of wires or electromagnetic waves.
Timer-Controlled System	A pressure distribution system where pump on and off times are preset, discrete time periods.

Term	Meaning / Description
Total Suspended Solids (TSS)	Suspended solids refer to the dispersed particulate matter in a wastewater sample that may be retained by a filter medium. Suspended solids may include both settleable and unsettleable solids of both inorganic and organic origin. This parameter is widely used to monitor the performance of the various stages of wastewater treatment, often used in conjunction with BOD5 to describe wastewater strength. The test consists of filtering a known volume of sample through a weighed filter membrane that is then dried and re-weighed.
Treatment Component	A class of on-site sewage system components that modify and/or treat sewage or effluent prior to the effluent being transmitted to another treatment component or a disposal component. Treatment occurs by a variety of physical, chemical, and/or biological means. Constituents of sewage or effluent may be removed or reduced in concentrations.
Treatment Standard 1	A thirty-day average of less than 10 mg/l of BOD_5 and 10 mg/l of total suspended solids and a thirty-day geometric mean of less than 200 fecal coliform/100ml.
Treatment Standard 2	A thirty-day average of less than 10 mg/l of BOD_5 and 10 mg/l of total suspended solids and a thirty-day geometric mean of less than 800 fecal coliform/100ml.
Turbulent Flow Emitters	Drip emitters that allow a varying discharge depending on the pressure applied (flow rate increases as system pressure increases). A pressure regulator is required with this type of emitter to ensure discharge is in accordance with design.
Vertical Separation	The depth of unsaturated, original, undisturbed soil of Soil types 1B - 6 between the bottom of a disposal component and the highest seasonal water table, a restrictive layer, or Soil Type 1A.
Wastewater	Water-carried human excreta and/or domestic waste from residences, buildings, industrial establishments or other facilities. (See sewage.)
Wastewater Design Flow	The volume of wastewater predicted to be generated by occupants of a structure. For residential dwellings, this volume is calculated by multiplying the number of bedrooms by the estimated number of gallons per day (gpd), using either the minimum state design standard (120 gpd) or the locally established minimum standard (such as 150 gpd).

WAC 246-272-09001(1) (Minimum Design Package/Submittal Information)

(1) Prior to beginning the construction process, a person proposing the installation, repair, modification, connection to, or expansion of an OSS, shall develop and submit the following to the local health officer and obtain approval:

(a) General information including:

(i) Name and address of the property owner and the applicant at the head of each page of submission;
(ii) Parcel number and address, if available, of the site;
(iii) Source of drinking water supply;
(iv) Identification if the property is within the boundaries of a recognized sewer utility;
(v) Size of the parcel;
(vi) Type of permit for which application is being made, for example, new installation, repair, expansion, alteration, or operational;
(vii) Source of sewage, for example, residential, restaurant, or other type of business;
(viii) Location of utilities;
(ix) Name of the site evaluator;
(x) Name of the designer;
(xi) Date of application; and
(xii) Signature of applicant.

(b) The soil and site evaluation as specified under WAC 246-272-11001(2).

(c) A complete, detailed, and dimensional site plan including:

(i) Designated areas for the proposed initial system and the reserve area;
(ii) The location of all soil logs and other soil tests for the OSS;
(iii) General topography and/or slope of the site;
(iv) Site drainage characteristics;
(v) The location of existing and proposed encumbrances affecting system placement, including legal access documents if any component of the OSS is not on the lot where the sewage is generated; and
(vi) An arrow indicating north.

(d) A detailed system design meeting the requirements under WAC 246-272-11501 including:

(i) A dimensional drawing showing the location of components of the proposed OSS, and the system designed for the reserve area if reserve site characteristics differ significantly from the initial area;
(ii) Vertical cross-section drawings showing:
(A) The depth of the disposal component, the vertical separation, and depth of soil cover; and
(B) Other OSS components constructed at the site.
(iii) Calculations and assumptions supporting the proposed design, including:
(A) Soil type;
(B) Hydraulic loading rate in the disposal component; and
(C) System's maximum daily flow capacity.

(e) Such additional information as deemed necessary by the local health officer.

Tables

Table 1 Minimum Horizontal Separations

Items Requiring Setback	From edge of disposal Component[8] and reserve area	From septic tank, holding tank, containment vessel, pump chamber, and distribution box	From building sewer, collection, and non-perforated distribution line[1]
Non-public well or suction line	100 ft.	50 ft.	50 ft.
Public drinking water well	100 ft.	100 ft.	100 ft.
Public drinking water spring[3]	200 ft.	200 ft.	100 ft.
Spring or surface water used as drinking water source[2,3]	100 ft.	50 ft.	50 ft.
Pressurized water supply line[4]	10 ft.	10 ft.	10 ft.
Properly decommissioned well[5]	10 ft.	N/A	N/A
Surface water[3] **Marine water** **Fresh water**	 100 ft. 100 ft.	 50 ft. 50 ft.	 10 ft. 10 ft.
Building foundation	10 ft. [6]	5 ft. [6]	2 ft.
Property or easement line [6]	5 ft.	5 ft.	N/A
Interceptor / curtain drains/ drainage ditches **Down-gradient[7]** **Up-gradient[7]**	 30 ft. 10 ft.	 5 ft. N/A	 N/A N/A
Down-gradient cuts or banks with at least 5 ft. of original, undisturbed soil above a restrictive layer due to a structural or textural change	25 ft.	N/A	N/A
Down-gradient cuts or banks with less than 5 ft. of original, undisturbed, soil above a restrictive layer due to a structural or textural change	50 ft.	N/A	N/A

[1] "Building sewer" as defined by the most current edition of the Uniform Plumbing Code. "Non-perforated distribution" includes pressure sewer transport lines.

[2] If surface water is used as a public drinking water supply, designers shall locate the OSS outside the required sanitary control area.

[3] Measured from the ordinary high-water mark.

[4] The local health officer may approve a sewer transport line within 10 feet of a water supply line if the sewer line is constructed in accordance with section 2.4 of the department of ecology's "Criteria For Sewage Works Design," revised October 1985, or equivalent.

[5] Before any component can be placed within 100 feet of a well, the designer shall submit a "decommissioned water well report" provided by a licensed well driller, which verifies that appropriate decommissioning procedures noted in chapter 173-160 WAC were followed. Once the well is properly decommissioned, it no longer provides a potential conduit to groundwater, but septic tanks, pump chambers, containment vessels or distribution boxes should not be placed directly over the site.

[6] The local health officer may allow a reduced horizontal separation to not less than two feet where the property line, easement line, or building foundation is up-gradient.

[7] The item is down gradient when liquid will flow toward it upon encountering a water table or a restrictive layer. The item is up-gradient when liquid will flow away from it upon encountering a water table or restrictive layer.

[8] For subsurface drip systems “edge of the disposal component” is considered to be the nearest dripline to the item requiring a setback.

Table 2 Primary Drip Design Parameters (residential applications)[1]

# Bedrooms	Soil Type	Minimum Pretreatment						Pretreatment to 10/10 BOD/TSS					
		1[2], 2A	2B	3	4	5	6	1[2], 2A	2B	3	4	5	6
		Minimum number emitters required						**Minimum number emitters required**					
2		240	240	300	300	400	900	240	240	300	300	400	900
3		300	360	450	450	600	1350	300	360	450	450	600	1350
4		400	480	600	600	800	1800	400	480	600	600	800	1800
5		500	600	750	750	1000	2250	500	600	750	750	1000	2250
# Bedrooms		**Dripline required at minimum emitter spacing (ft)**						**Dripline required at minimum emitter spacing (ft)**					
2		240	240	300	300	400	900	120	120	300	300	400	900
3		300	360	450	450	600	1350	150	180	450	450	600	1350
4		400	480	600	600	800	1800	200	240	600	600	800	1800
5		500	600	750	750	1000	2250	250	300	750	750	1000	2250
		Minimum emitter spacing (ft)						**Minimum emitter spacing (ft)**					
		1	1	1	1	1	1	0.5	0.5	1	1	1	1
		Minimum dripline spacing (ft)[3]						**Minimum dripline spacing (ft)[3]**					
		1	1	1.5	2	2	2	1	1	1	1.5	1.5	2
# Bedrooms		**Minimum dripfield area (ft^2)[4]**						**Minimum dripfield area (ft^2)[4]**					
2		240	240	450	600	800	1800	120	120	300	450	600	1800
3		300	360	675	900	1200	2700	150	180	450	675	900	2700
4		400	480	900	1200	1600	3600	200	240	600	900	1200	3600
5		500	600	1125	1500	2000	4500	250	300	750	1125	1500	4500
		Minimum number of doses per day						**Minimum number of doses per day**					
		12	12	12	12	12	12	12	12	12	12	12	12
		Minimum number of distribution zones						**Minimum number of distribution zones**					
		1	1	1	1	1	2	1	1	1	1	1	2

[1] Values in this table were developed for statewide application and are considered conservative. The local health officer may require additional emitters or greater spacing (area) if soils are compacted or cemented, if soil structure is poor, for sensitive sites or in areas of special concern.

[2] Drip trenches/beds in "Type 1A" soils must be filled with a minimum 2 feet of ASTM C-33 sand below the dripline and 6 inches (8-10 inches if frost is a concern) above the dripline. Minimum sand depth may be reduced to 1 foot below dripline if pretreatment meets Treatment Standard 2 (all three parameters). For Type 1B soil, use values in the column corresponding to the soil type of the non-gravel soil component.

[3] Where slopes are > 20% dripline spacing should be increased by one foot from the values outlined in this table

[4] Regardless of pretreatment and minimum (constructed) area requirements, permit applicants must set aside a total area for primary and reserve drainfield equal to twice the area requirements listed under "Minimum Pretreatment". Minimum constructed area requirements for soil types 1 & 2 (in the "10/10" column) require pretreatment to "Treatment Standard 2" (including disinfection) if vertical separation is less than 2 feet.

Note: For commercial applications (including mobile home parks, apartments, condominiums, etc.), divide system design flow by maximum daily emitter discharge from Table 5 Primary Drip Design Parameters (non residential applications) to determine minimum number of emitters required, then multiply number of emitters by area per emitter (min. emitter spacing times min. dripline spacing) for minimum dripfield area. An area of equal size as just determined for the primary dripfield must be set-aside as a reserve area.

Table 3 Bulk Density Where Root Restrictions Occur for Various Soil Textures

Soil Textural Class	Bulk Density Where Root Restriction Begins to Occur (g/cm3)
Coarse, medium, and fine sand and loamy sands other than loamy very fine sand	1.69
Very fine sand, loamy very fine sand	1.63
Sandy loam	1.63
Loam, sandy clay loam	1.60
Clay loam	1.60
Sandy clay	1.59
Silt, silt loam	1.54
Silty clay loam	1.49
[1]Silty clay	1.45
[1]Clay	1.39

[1]Drainfields are not allowed in these soil types in Washington

A bulk density test is recommended if soil is determined to be compacted or cemented. If soil density approaches (within 95% of) the values shown in this table, the number of emitters and corresponding area should be increased accordingly from values shown in shown in Table 2. (See discussion on Bulk Density in the Appendix for related information.

Table 4 Maximum Emitter Discharge Rates by Soil Type (gallons per hour)

WA Soil Type	**1, 2A**	**2B**	**3**	**4**	**5**	**6**
Geoflow Dripline	1.02	1.02	1.02	0.53	0.53	0.53
Netafim Dripline	0.92	0.92	0.92	0.62	0.62	0.42

Table 5 Primary Drip Design Parameters (non residential applications)[1]

WA Soil Type	**1,2A**	**2B**	**3**	**4**	**5**	**6[2]**
Maximum daily discharge per emitter (gpd/emitter)	1.2	1	.8	.8	.6	.25
Minimum emitter spacing (ft)	1	1	1	1	1	1
Minimum dripline spacing (ft)	1	1	1.5	2	2	2
Minimum area per emitter (ft^2)	1	1	1.5	2	2	2

[1]Table values apply regardless of pretreatment
[2]On site systems with design flows of 1000 gpd or greater are not allowed in Type 6 soils or on sites with slopes 30 percent or greater.
To use this table: Divide total design flow of the system by the value shown for maximum daily discharge per emitter (top row) to determine minimum number of emitters required and multiply the number of emitters required by the value in the bottom row (minimum area per emitter) to determine minimum dripfield area.

Table 6 Dripline Installation Methods

INSERTION METHOD	ADVANTAGES	DISADVANTAGES
a) Hand Trenching	• Handles severe slopes and confined areas • Uniform depth	• Slow • Labor intensive • Disrupts existing turf and ground • Back fill required
b) Oscillating or Vibrating plow. Use the type that inserts the dripline directly in place, not one that pulls the dripline through the soil.	• Fast in small to medium installations • Minimal ground disturbance • No need to back fill the trench	• Depth has to be monitored closely • Cannot be used on steeper slopes >20% • Requires practice to set and operate adequately • Tends to "stretch" pipe. Shorter runs are required
c) Trenching machine: Ground Hog, Kwik-Trench, E-Z Trench	• Faster than hand trenching • May use the 1" blade for most installations • Uniform depth	• Slower, requires labor • Disrupts surface of existing turf • Back fill required
d) Tractor with proprietary dripline insertion tool - see Figure 3.	• Fast. • Little damage to existing turf because of the turf knife. • Minimal ground disturbance • Does not stretch drip line • Adaptable to any tractor	• The installation tool is designed specifically for this purpose and is available from at least one of the dripline manufacturers
e) Tractor mounted 3-point hitch insertion implement	• Fastest. Up to four plow attachments with reels •A packer roller dumps back soil on top of the pipe	• Suitable for large installations only

NOTE: Disturbing the soil may effect the pore structure of the soil and create hydraulic conductivity problems. Drip system designers should specify the installation method. Consultation with a qualified soil scientist or professional engineer before making the installation technique decision is recommended.

Table 7 Minimum Pump Chamber Sizes for Commercial Applications

Daily Design flow (gpd)	Minimum pump chamber capacity (gallons)
< 1000	1000
1000 - 2000	1500
2000 - 3000	2500
3000 - 5000	3500
5000 - 7500	4000
7500 - 14500	5000

For the purpose of these standards ”commercial” means any non-residential applications and multiple family applications such as mobile home parks, apartments, condominius, etc.
The Department’s publication Recommended Standards and Guidance for Pressure Distribution Systems require pump chambers to be sized at approximately 2 times the daily design flow but allow for reduced sizing where a duplex pump system is utilized and maintenance service is available on a continuous basis from an entity acceptable to the local health jurisdiction.

Table 8 Washington Soil Classifications

Soil Type	Soil Textural Classification Description
1A	Very gravelly[1] coarse sands or coarser, extremely gravelly[2] soils.
1B	Very gravelly medium sands, very gravelly fine sands, very gravelly very fine sands, very gravelly loamy sands.
2A	Coarse sands (includes the ASTM C-33 sand).
2B	Medium sands.
3	Fine sands, loamy coarse sands, loamy medium sands.
4	Very fine sands, loamy fine sands, loamy very fine sands, sandy loams, loams.
5	Silt loams that are porous and have well developed structure
6	Other silt loams, sandy clay loams, clay loams, silty clay loams.

[1] “Very Gravelly” means soil with 35% to 60% gravel and coarse fragments, by volume.

[2] “Extremely Gravelly” means soil with greater than 60% gravel and coarse fragments, by volume.

Figures

Note: Figure 1 and Figure 2 appear earlier in this document on pages 6 and 7 respectively

Figure 3 One Type of Subsurface Dripline Installation Tool

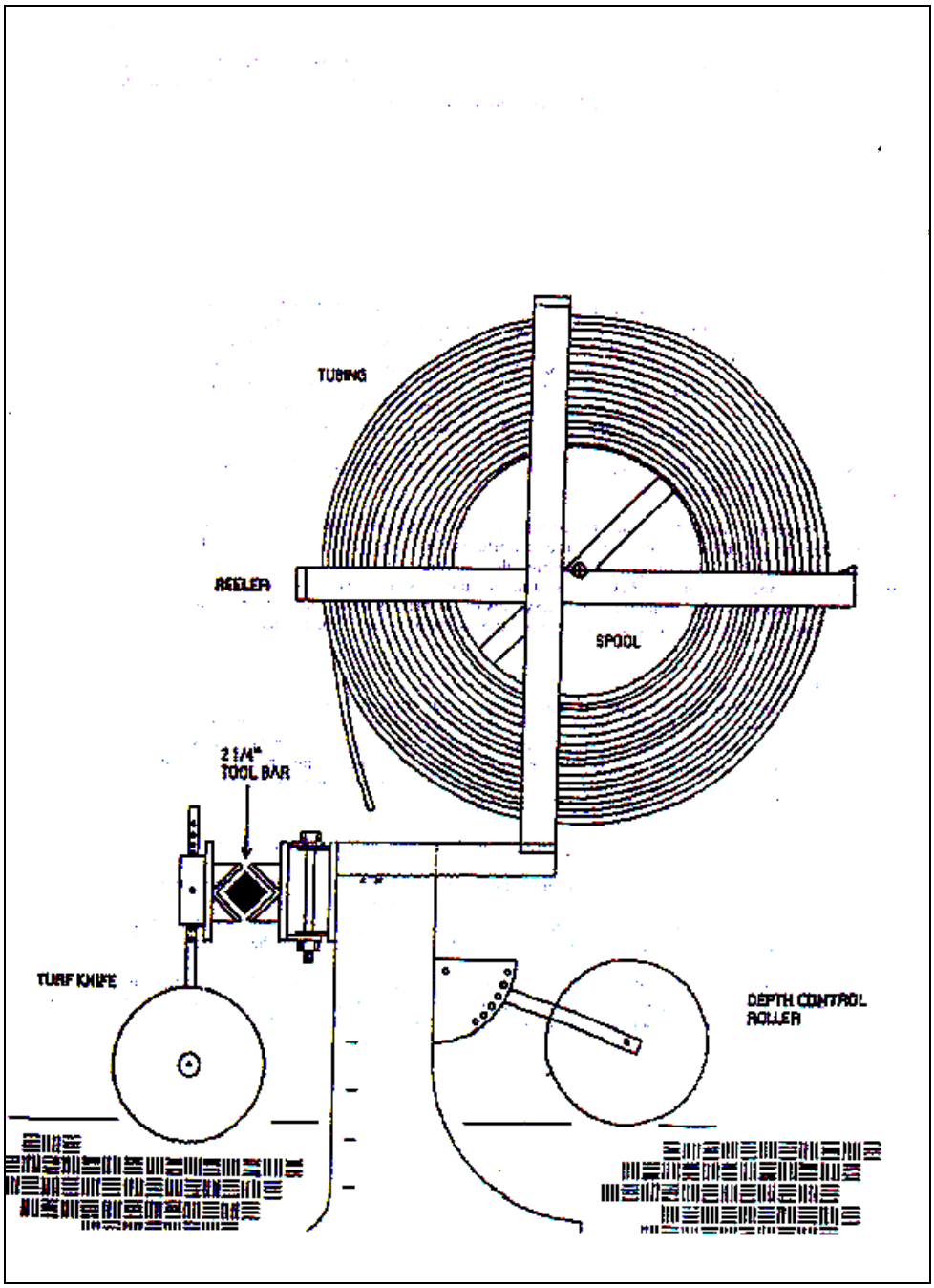

Figure 4 Looped Drip Distribution Field with Supply and Return Manifolds

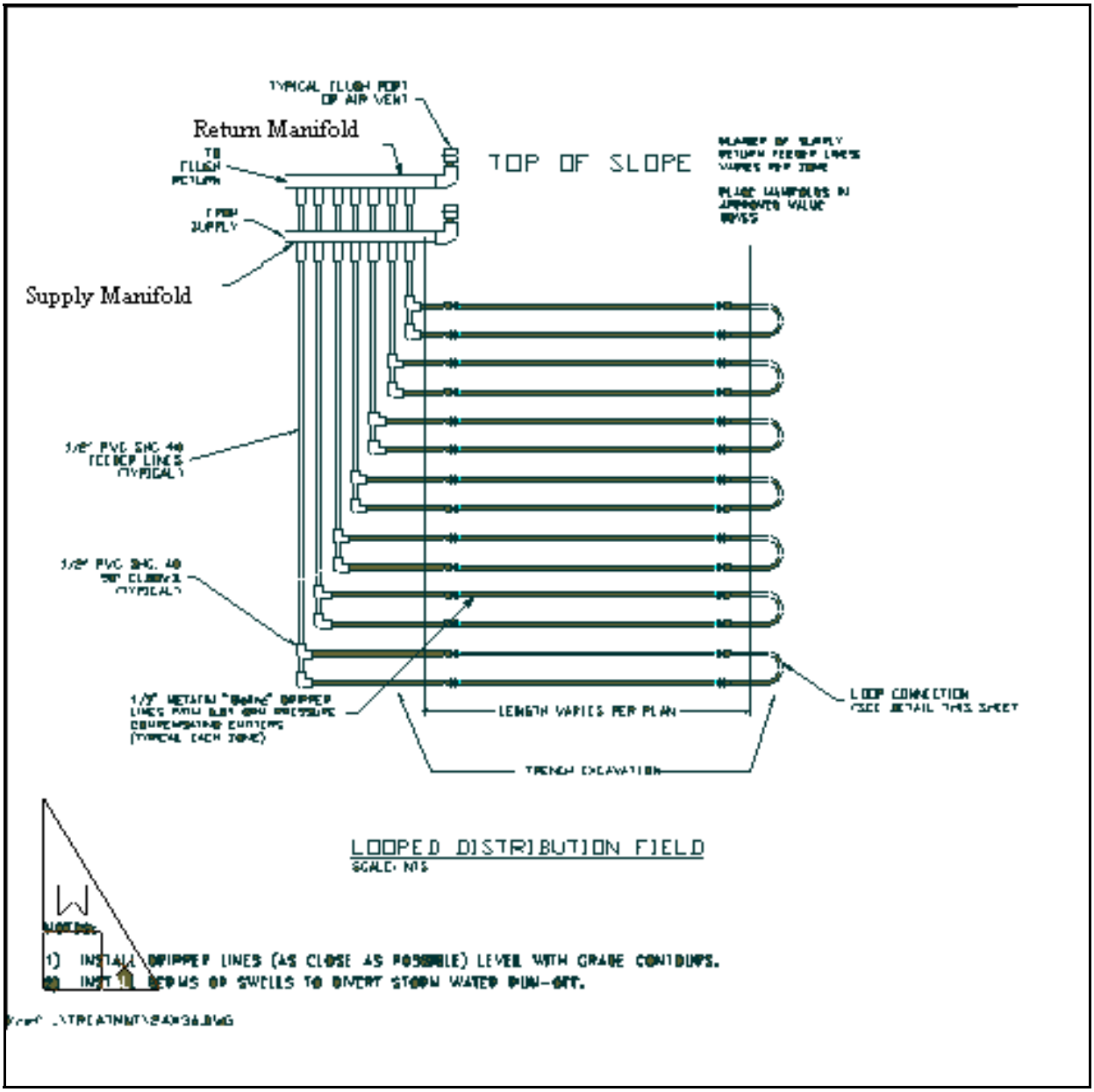

Figure 5 Control Valve, Filter and Pressure Regulator in Protected Vault*

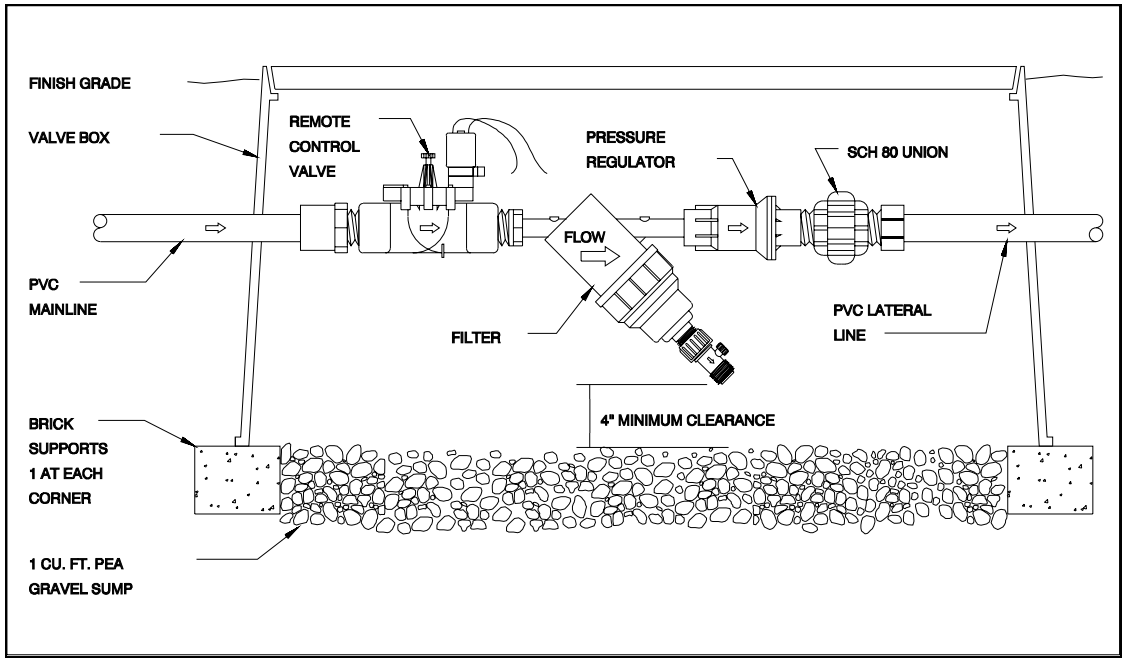

(*Note: drawing is for illustration of protected vault – a pressure regulator is not needed with pressure compensating emitters)

Figure 6 End Feed Subsurface Drip System Installation with Flush/Sub-Manifold

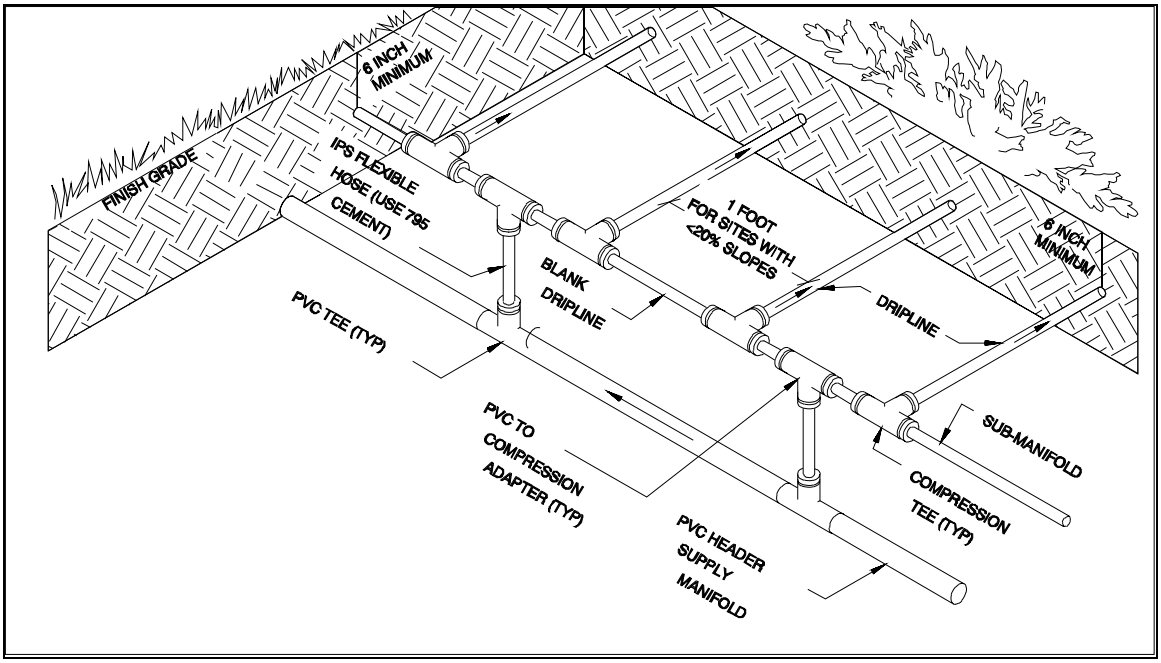

Figure 7 Air/Vacuum Relief Valve in Valve Box with Gravel Sump

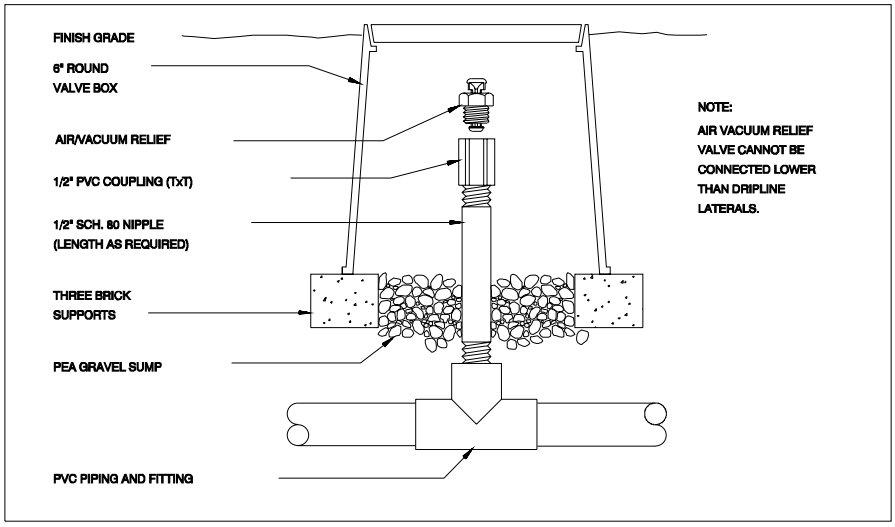

Figure 8 Dripfield Installation on Mounded Site

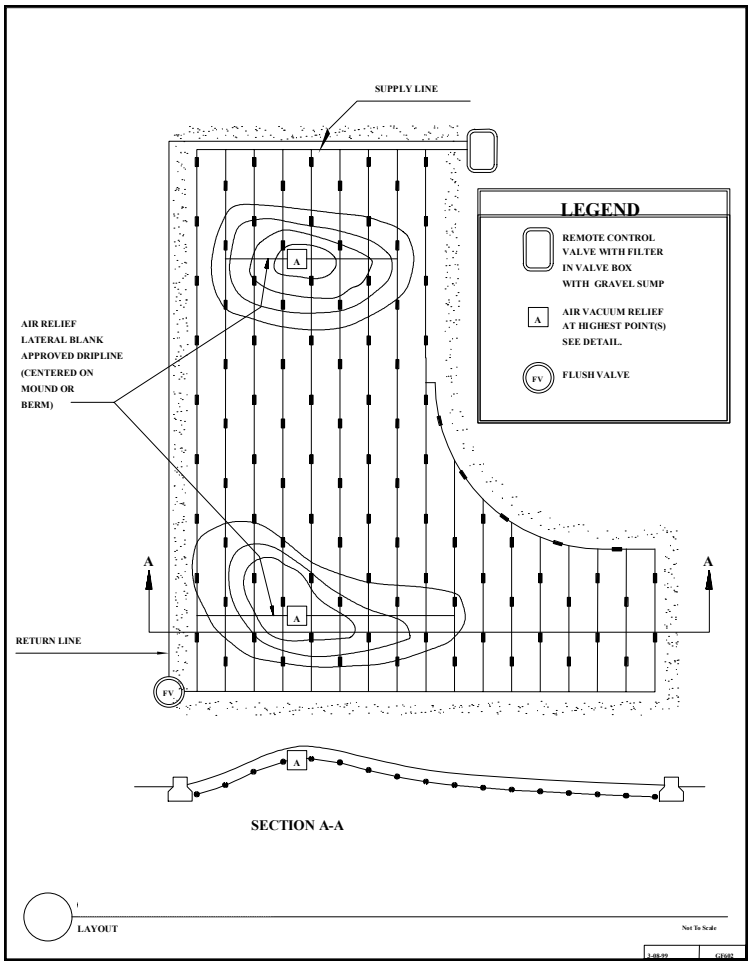

Design Examples

Example A: Design is for a 3-bedroom house on a site with a 15% slope in Type 3 soil with minimum pretreatment. Vertical separation is 30 inches in the primary and reserve dripfield areas. The site is located in an area with moderate climate and frost is not a concern, therefore at the minimum installation depth of 6 inches, the remaining vertical separation (24 inches) is adequate for a system with minimum pretreatment. From Table 2 Primary Drip Design Parameters (residential applications)1 under "Minimum Pretreatment" for Type 3 soil and 3 bedrooms, the minimum number of emitters required is 450. At the minimum allowable emitter spacing of 1 foot, a total of 450 feet of dripline is required. Minimum dripline spacing is 1.5 feet and total area required for the dripfield is 675 sq. ft (see Table 2 or calculate: number emitters times emitter spacing times dripline spacing). The designer lays out the dripline in a grid configuration within an area 15 ft. by 45 ft. 10 laterals (dripline segments), each with 45 emitters on 1-foot centers are connected to the supply manifold. The dripline is spaced 1.5 feet apart, with ¾ foot between the outer most dripline and the edges of the dripfield. At least 6 inches of dripline is required between the proximal and distal emitters and the outside of the dripfield bed.

The designer must show there is sufficient area to construct the primary dripfield and also to set aside an equal area for reserve (as shown in Table 2 under "Minimum Pretreatment" – this area requirement applies regardless of pretreatment). (Note: Drip installations are not site intrusive. In most cases if a dripfield fails, the dripline can be removed and a drip or conventional system can still be installed in the same location). The designer chooses Geoflow PC dripline with a maximum instantaneous discharge of 1.02 gallons per hour (see Table 4 Maximum Emitter Discharge Rates by Soil Type (gallons per hour).

Only one distribution zone is required for Type 3 soil (see Table 2). System discharge rate for pump sizing is 450 (emitters) times 1.02 GPH/60 minutes per hour = 7.65 gpm. (The pump must also be rated to produce the required system discharge rate plus dripline manufacturer recommended flushing velocity – see dripline manufacturer for recommendations). A filter is chosen which is rated for the total system discharge rate. Site topography is relatively uniform and only one air/vacuum relief valve is required. The return manifold is sloped back to the septic tank to allow for gravity flow. Minimum dosing frequency is 12 times per day for all soil types. Because only minimum pretreatment is provided, the control panel must be capable of automatic system flushing (to control field flush valves).

Example B: Design is for a drip system to serve a 4-bedroom home. The site is approximately level, soil type is 1A, with 19 inches of vertical separation. The available area is very limited and the designer wishes to take advantage of the drainfield size allowance for Type 1 soils with "10'10" pretreatment (see "Minimum dripfield area" under the column reading "Pretreatment to 10/10" in Table 2 Primary Drip Design Parameters (residential applications)1). Assuming frost is not a concern the minimum dripline installation depth is 6 inches. With the remaining vertical separation available (13 inches) , the only way the minimum size (120 Sq. ft.) listed in the table is allowed is with a pretreatment system listed under the Department of Health's *Approved List* (see Glossary of Terms) as meeting all three parameters of "Treatment Standard 2" (including the fecal coliform standard). The designer checks the list and specifies a treatment system listed on the Approved List as meeting all three parameters of TS2, which satisfies the requirement.

The system will require 400 emitters or 200 feet of dripline with emitters spaced 6 inches apart. Minimum area is 200 square feet. A 10 x 20 foot bed is to be constructed and lined with minimum 12 inches of ASTM C-33 sand below the dripline. The native soil is extremely gravelly and unsuitable for backfill, so another 6 inches (minimum) of C-33 sand is required over the dripline. Connected to the supply manifold are 10 each 20-foot lengths of dripline (with 6 inch emitter spacing), with dripline spaced on one-foot centers. The outside dripline must be 6 inches from the edge of the bed on each side, and the proximal and distal emitters must be at least 6 inches from the each end of the bed. The designer chooses Netafim dripline, (maximum emitter discharge for that soil type is 0.92 GPH – (see Table 4 Maximum Emitter Discharge Rates by Soil Type (gallons per hour). Total system flow (without allowance for

scouring velocity (see dripline manufacturer) is 400 emitters times 0.92 GPH/60 minutes per hour = approx. 6.1 GPM. At least one air vacuum relief valve is required. The filter must be rated to operate at the total system discharge rate. A minimum of 12 equally spaced doses per day is required.

Example C: Design is for a drip system to serve small office complex to be located on a level site with Type 4 soils. Design flow for the project is 750 gallons per day. Vertical separation is 35 inches. Climate is cold and frost is a concern (system expected to operate year round) so dripline will be installed at 10 inches depth from grade. Remaining vertical separation is 25 inches and wastewater from similar facilities is known to be "residential strength"(only minimum pretreatment is required). The minimum number of emitters required (from Table 5) is 750 gpd / 0.8 gpd/emitter = 937.5 (round off to 938). The site has plenty of area available and the designer decides to go ahead and specify 1000 emitters. At the minimum emitter spacing of 1-foot (12 inches) exactly one 1000-foot roll of dripline is ordered. Minimum dripline spacing is 2 feet (see Table 5) so minimum area is 1000 emitters times 1 foot emitter spacing times 2 foot dripline spacing = 2000 sq. ft. The project is for new construction so a reserve area is required at least 938 x 2 sq. ft. / emitter = 1876 sq. ft. (designers reserves 2000 sq. ft.).

The designer chooses Geoflow dripline and maximum discharge rate is 0.53 GPH (see Table 4). Since 1000 emitters have been specified, at least two distribution zones are required. System discharge rate for each zone will be 500 emitters times 0.53 gph divided by 60 minutes per hour = 4.4 gpm. Filters must be specified for this flow plus any additional flow required for line flushing in accordance with manufacturer's recommendations. Since the system is a commercial one (and because only minimum pretreatment is to be provided) the control panel must be capable of automated system flushing. An additional output on the panel will also be needed to operate an electric control valve to distribute to two different zones (alternatively an indexing valve could have been specified without the need for an electrically actuated valve and additional output on the control panel). With minimum pretreatment an effluent "pre-filter is required at the outlet of the 1500 gallon septic tank. A 1000-gallon pump chamber is required (see Table 7 Minimum Pump Chamber Sizes for Commercial Applications).

Soil Properties that Affect Water Movement in Soils

Porosity

As the parent material of the soil becomes weathered and loosened, mixed by a variety of forces, pore space develops, providing a place for air and water to be held. It is not only the amount of pore space that is important but also the sizes of the pores, since small pores retain water very well and large ones tend to drain out to be re-filled with air. Therefore, it is desirable to have both large and small pores in the soil. The percentage of pore space is called the "soil porosity".

Density

The density of soil is an expression of how loose or tight a soil is. Density of soil is really "bulk density" because it includes both the solid particles and the pore spaces among them. Therefore, if a soil is compacted, the amount of pore space is reduced, and the weight of a given volume of that soil is increased. Density can be expressed in the English system, such as pounds per cubic foot, but it is customary to use metric units. Water has a density of 1 gram per cubic centimeter (cm^3), making it convenient to compare other materials to it. The mineral grains in the soil have a density of about 2.6 grams per cm^3. The total volume of the soil is around 40 to 60% pore space, so by using a mean value for porosity we get a bulk density of 1.3 grams per cm^3. Note that this is one-half the density of the minerals in the solid rock.

Some soils have naturally compacted "pans" that may have a bulk density of 2+ grams per cm^3. This is restrictive to root penetration and water movement. In other cases heavy tractors and machinery may cause serious compaction, which is very limiting to plant growth.

Source: Soil Science Simplified, 2nd Edition, 1988 Harpstead, M., Hole, F., Bennett, W.; Iowa State University Press

Estimating the Bulk Density of a Soil Sample
Obtain an iron cylinder or a tin can with open ends, which is about the size of a pint ice-cream container. Drive the cylinder or can into the soil so that the top is even with the soil surface. Use a large knife to cut the soil from around the cylinder. Next, dig out the buried cylinder using care to slice off the bottom evenly without disturbing the soil core. Transfer the soil to a pan and oven dry the sample. The bulk density can be calculated by dividing the oven-dry weight in grams by the volume of the iron cylinder (the soil core) in cubic centimeters. Thus, if the oven dry weight of the soil core is 780 grams and the volume of the same soil core is 600 cubic centimeters, the bulk density is obtained by dividing 780 by 600, or 1.3 grams per cubic centimeter (gm per cc).
Most plants do best at a soil bulk density of 1.1 to 1.4 gm per cc.
Source: Soils and their Management; 5th Edition, 1983, Donahue, R., Follet, R., Tulloch, R. Interstate printers and Publishers, Inc.

Note: See Table 3 Bulk Density Where Root Restrictions Occur for Various Soil Textures for a list of soil densities where root restrictions develop for various soil types

SDS in Type 1 Soils
Dripline in all Type 1 soils must be laid in a trench or bed lined with at least 2 feet of ASTM C-33 sand. The sand depth may be reduced to a minimum of one foot below the dripline where pretreatment to Treatment Standard 2 or better is provided (must be shown on the Department's Approved List as meeting all 3 parameters). The minimum area per emitter is one square foot, but may be reduced to ½ square foot per emitter if dripline with emitters spaced 6 inches apart is installed and where pretreatment to Treatment Standard 2 or better is provided (must be shown on the Department's Approved List as meeting all 3 parameters. Dripline/emitters may be located no closer to the outside edges of the trench or bed than 6 inches. Dripline must be covered with a minimum of 6 inches (8-10 in areas where frost is a concern) of ASTM C-33 sand. (See Table 2 Primary Drip Design Parameters (residential applications)1)for design criteria for residential applications and Table 5 Primary Drip Design Parameters (non residential applications) for design criteria for commercial (including multi-family) applications).

Frost Protection

Buried drip systems have some built-in design features that tend to make them resistant to frost damage, including polyethylene tubing which is resistant to cracking when frozen and vacuum release valves that allow the system to automatically drain between doses. Strategically placed drain valves are recommended where frost is a concern.

Outlined below are some additional measures to prevent frost damage:
1. Manifolds, supply lines and return lines can be sloped back to their respective dosing or treatment tanks to drain between doses. Under extreme conditions return and supply manifolds should be insulated or buried below the frost line. Be sure a drain valve on the flush line remains open for a long enough for the entire field to drain.
2. Remove the check valve at the pump.
3. Insulate all equipment boxes, including Headworks box or filter and field flush valve boxes as well as zone dosing valves, air vacuum relief valves. Use closed-cell insulation such as perlite in a plastic bag.
4. The top of air vacuum relief valves must be no higher than soil surface.
5. If using an index valve to split field zones, be sure it is capable of self-draining.
6. Dripline will self-drain through the emitters into the soil. If the cover crop over the dripfield is not yet adequately established, add hay or straw over the field for insulation.
7. Mark valve boxes with a metal pin so you can find it in the winter if needed when covered in snow.

Rodent Protection
Rodents are active in some areas and can damage drip system components. Gophers have been reported to eat through dripline and burrow into valve boxes and other enclosures where they can damage components or simply fill the valve box up with soil. One dripline manufacturer reports that rodents will not burrow towards

dripline when the ground is kept continuously moist (one reason for high frequency dosing). This still could pose a problem where a drip system is charged and tested and then left out of service for a period of time, or where a system has been in continuous service but is temporarily shut down during a family vacation. Ideally, a drip system should be tested shortly before it is placed into continuous service.

Another means of discouraging rodents is to add enough butyric acid to the pump chamber to maintain a 2-ppm solution. Butyric acid is the substance that gives spoiled butter its rancid smell. This substance is relatively harmless but creates an unpleasant odor. Possible ways to prevent rodents from burrowing into valve boxes are to line the bottom of the valve box with bricks, drainrock, or other hard material to create a barrier to digging, or to sprinkle butyric acid or powdered boric acid at the bottom of the enclosure, which again creates an unpleasant odor. Avoid sprinkling anything corrosive on wires or other SDS components.

Drainback and the Chimney Effect

Drainback
"Drainback" can be serious problems with improperly designed or installed drip systems in fine textured soils. Designers and installers should be aware of the cause and means to prevent these problems.
"Drainback" occurs when effluent accumulates during dosing in the trench or channel in which dripline is installed and then flows by gravity to lower points in the system, such as into manifold or transport piping trenches. If the dose volume is sufficient, effluent can eventually pond or break out to the surface. The problem occurs in fine textured soils when the combination of emitter discharge rate, pump run time and total dose volume exceeds the infiltrative capacity of the soil. Installation technique and soil conditions during installation can contribute to the problem. Vibratory plows or insertion tools where dripline follows a pulled "bullet" can compact or smear the soil, particularly when the soil is too wet during installation. This can reduce the infiltrative capacity of the soil and encourage effluent to follow the channel or trench in which the dripline is installed. On sloped sites, where multiple dripline segments connect to a sloped trench carrying transport piping, the cumulative flow into the trench can be significant.

The problem can be solved in a number of ways. Transport & manifold piping should always be installed up gradient from dripline (see Pressure Distribution Standards Figure 3B for example). Earthen dams can be constructed where dripline connects to the manifold or transport piping to prevent passage of effluent. Select dripline with the lowest available discharge rate (currently 0.5 & 0.6 GPH) in fine textured soils. Design drip systems to dose frequently (see Design Standards and Tables in Appendix for minimum dose frequency for each soil type). Pump run times should not exceed manufacturer's recommendations for the soil type and designers should consider the volume of effluent that drains between doses. Select an installation technique and follow manufacturers instructions to minimize smearing. Consult knowledgeable dripline installers for other hints.

Chimney effect
Another problem reported with new drip systems installed in fine textured soils is called the "chimney effect" in which effluent has been observed to surface in shallow installations during dosing. This phenomenon has been reported mostly with "trench" type installations and has been observed to decrease over time in most cases. This may be caused when dripline is installed into native soil with a relatively low infiltrative capacity and then backfilled. If the soil used for backfill is not the native soil or where native soil is loosened during the procedure it can sometimes result in an increased infiltrative capacity and effluent tends to flow upwards into the backfill. Lightly compact backfill after installation, install dripline deeper, increase dosing frequency or decrease pump "run time" to prevent this problem.

Drip Inspection Checklist

The predominant soil type for this system is _____.
System is designed for residential_____ or commercial_____
If residential, number bedrooms_____
If commercial, system type:_____; design flow_____
(only "residential strength" wastewater or cleaner allowed for drip distribution)

Testing/Inspection

- This Subsurface Drip System (SDS) is being inspected prior to operational use.
- The installer performed initial hydraulic and pressure tests of the distribution system, and verified that the system is watertight, recorded baseline flow-rate and pressure information prior to this installation.
- The installer provided the results of the initial hydraulic and pressure tests to me at the inspection.
- I __ **did** __ **did not** require the hydraulic test to be performed in my presence.
- Initial operating pressure of system (PSI)_____
- Initial measured system flow rate (GPM)_____

Installation

- A qualified on-site sewage system installer, with specific training in the installation of subsurface drip systems, installed this SDS.
- The dripline was installed using one of the following methods (check the method used):
  - __ Hand-trenching or
  - __ Use of a trenching machine, vibratory plow or other approved insertion tool (describe: _____).
- Installation technique that pulled or stretched the dripline was **not used**.

Materials (General)

- All materials used in this SDS are warranted by the manufacturer for use with wastewater and resistant to plugging from solids, bacterial slime and root intrusion.
- All transport pipe, supply and return manifolds, and fittings are Schedule 40 PVC or better.
- Fittings used to join dripline to the distribution and flush manifolds meet manufacturer's recommendations for type, size, material, and pressure rating.

Components / Sizing

Dripline

- All dripline is color-coded (purple or pantone 522) to identify the (non-potable) water source.
- This SDS includes a known root inhibitor or herbicide incorporated into the material during the manufacturing process to prevent root intrusion into emitters.
- Dripline is pressure compensating, with maximum rated discharge of _____ gpd.
- Dripline is installed parallel to contours on sloped sites.
- Dripline is installed ___-inches deep. (Minimum depth = 6 inches; maximum depth = 18 inches; where frost is a concern, recommended depth is 8 to 10 inches.)
- Dripline spacing is _____-feet.
- Dripline length meets manufacturer's specifications (maximum run) to insure equal distribution.
- Dripline installed level & parallel with contours:
- SDS was installed to prevent "drainback" and low-level drainage of effluent along dripline or manifolds using the following technique(s):
- ___ Manifolds were installed up gradient from dripline,

- ___ Dripline installed 4-inches lower than supply line,
- ___ Earth dams,
- ___ Check valves,
- ___ Other (specify) _____.

Filters

- Filters are __ disk type or __ fine-mesh screen type.
- Filters are as recommended by the manufacturer of the dripline.
- Filter manufacturer warrants filter for use with wastewater (resistant to corrosion).
- Filters are sized to operate at a flow rate at least equal to the maximum design discharge rate of the system.
- Filter flush volume and velocity are in accordance with manufacturer's specifications.
- Filters are either:
- __ automatically backwashed or
- __ continuously self-cleaning.
- All filters are readily accessible for inspection and servicing.
- An effluent "pre-filter" is installed at the septic tank outlet (for systems with only minimum pretreatment).
- If Netafim dripline is specified, "Techfilter" with root inhibitor must be specified.

Means to readily measure flow:

- Flow Meter (preferred) or other means to monitor flow is installed in a readily accessible location.
- Flow meter is warranted by the manufacturer for use with wastewater.
- Flow meter is rated for use within the expected flow range of the installed system.

Pump Chamber

- Pump chamber size is _____ gal. (Minimum volume = 1000 gallons for residential applications.)
- Pump chamber is installed at lower elevation, relative to the septic tank, to maximize available storage. If not, describe other method used to maximize available storage _____
  _____
  _____

Valves

- Air/Vacuum Relief Valves are installed at the high point of each distribution sector.
- All valves are installed in valve boxes with access to grade and include gravel sumps.
- All valves are readily accessible for inspection and/or service.
- All valves are automatic. (Required where minimum pretreatment is provided.)

Layout / Configuration

- Two or more separate distribution sectors are present. (Required for systems in Type 6 soil or with more than 1000 feet of dripline.)
- Ground cover (turf) or other landscaping has been planted over the drip field after installation to prevent erosion and provide additional treatment.

Flushing

- The SDS includes means to backwash filters and flush dripline/manifolds.

- Both supply and return manifolds were installed.
- Filter backwash and dripline flush is automatic. (Required where minimum pretreatment is provided.)
- Manual valves were installed (Allowed only with pretreatment to NSF standard 40 or better.).
- No hose bibs are installed as part of the flushing component (to prevent cross connection).
- Return Manifold slopes toward septic tank.
- A chemical injection port has been installed for future connection of a chemical injector pump.

Dosing

- This is a time dosed SDS.
- The dosing scheme is set for 12 doses per day.
- Dosing is tracked and verified by means of: *(check all that apply)*
- __ Digital control panel,
- __ Pump elapsed time meters (ETMs),
- __ Event counters
- __ Other _____

I have inspected this Subsurface Drip System and hereby state that, to the best of my knowledge, the information contained in this report is a true and accurate representation of this system.

_____
Inspector's Signature

_____
Inspector's Printed Name

_____
Health District/ Department

_____
Date

Drip Industry Links:

Links to external resources are provided as a public service and do not imply endorsement by the Washington State Department of Health. The inclusion of Web sites in this document does not constitute approval of marketing, advertising or labeling practices employed by a manufacturer, nor is it an affirmation of a manufacturer's claims of product performance. Products other than those represented by these Web sites may be available for use. The reader is advised to obtain a current List of Approved Systems and Products (available at www.doh.wa.gov/ehp/ts/pub.htm#wastewater) for the full list of approved subsurface drip products.

American Manufacturing Company, Inc.: http://www.americanonsite.com/
Center for Irrigation Technology: http://cati.csufresno.edu/cit/
Geoflow Subsurface Drip Systems: http://www.geoflow.com/
MicroIrrigation Forum: http://www.microirrigationforum.com/
Netafim USA: http://www.netafimusa.com/
Delta Environmental Products: http://www.deltaenvironmental.com/drip.htm

Bibliography

1. Ben-Asher, J., Phene, C.J.; May 1993; The Effect of Surface Drip Irrigation on Soil Water Regime Evaporation and Transpiration; Proceedings 6th International Conference on Irrigation
2. Bouma, J., Anderson,, J.L.; 1973, Relationships Between Soil Structure Characteristics and Hydraulic Conductivity; Field Soil Water Regime; Soil Science Society of America; p 77-105
3. Camp, Busscher, and Sadler; Wetting Patterns for Line-Source Trickle Emitters, ASAE paper No. 87-2524, 1987
4. Clothier, Scotter and Harper, Three-Dimensional Infiltration and Trickle Irrigation, ASAE paper # 83-2518, 1985
5. Converse, J., Jan. 1997, revised Jan. 1999, Drip Distribution of Domestic Wastewater; Small Scale Waste Management Project, University of Wisconsin-Madison
6. Darby, Tchobanoglous Emerick, and Test; Shallow Intermittent Sand Filtration: Microorganism Removal, The Small Flows Journal Vol. 3, Issue 1, Winter 1997
7. Darby, Tchobanoglous, Asri Nor and Maciolek; Shallow Intermittent Sand Filtration: Performance Evaluation; The Small Flows Journal Vol. 2, Issue 1, Winter 1996
8. Donahue, Follett and Tulloch; Our Soils and Their Management, Fifth Edition, The Interstate Printers and Publishers, Inc., 1983
9. Gupta, Rudra, and Dickinson, Modelling of Saturated Regime as Affected by Emitter Application Rates;
10. Harpstead, Hold and Bennett, Soil Science Simplified, 2nd Edition, Iowa State University Press, 1988
11. Heath, R., Basic Ground-Water Hydrology, US Geological Survey Water-Supply Paper 2220, US Government Printing Office, 1989
12. Hung, J., Determination of Emitter Spacing and Irrigation Run-Time Including Plant Root Depth;
13. Levin, Van Rooyen, P., and Van Rooyan, F., The Effect of Discharge Rate and Intermittent Water Application by Point Source Irrigation on the Soil Moisture Distribution Pattern, Soil Science Society of America Journal, Vol. 43, 1979
14. Lockington, Parlange, and Surin; Optimal Prediction of Saturation and Wetting Fronts during Trickle Irrigation, Soil Science Society of America Journal, Vol. 48, No. 3, May-June, 1984, pp. 498 – 493
15. Mahuta Jr., F., Boyle, W.C.; Gas Transport in the Unsaturated Zone of Soil Absorption Systems; On-Site Wastewater Treatment: Proceedings of the 6th National Symposium on Individual and Small Community Sewage Systems, (A.S.A.E.)
16. McCarthy, et. Al, Performance Evaluation of Alternative Treatment Systems in Northern Minnesota, Proceedings of 1998 ASAE Conference
17. Oron, G., Karmeli, D., The Flow Regime in the Root Zone Around a Subsurface Emitter, Israel Journal of Technology, Vol. 17, 1979 pp. 95-101

18. Oron, G., Simulation of Water Flow in the Soil Under Subsurface Trickle Irrigation with Water Uptake by Roots, 1981, Agricultural Water Management, Elsevier Scientific Publishing Co.
19. Osborne, D. and Harman, J., Design of Drip Disposal Systems for Wastewater Treatment and Disposal, Soil Science Society of NC Proc., Vol. XXXVI, 1993
20. Phene, C.J., et al; Research Successes, Applications and Needs of Subsurface Drip Irrigation
21. Phene, C.J., et al; 1993, Evaluation of a Subsurface Drip Irrigation System After 10 Cropping Seasons; Proceedings 1993 International Winter Meeting (A.S.A.E.)
22. Phene, C.J., Ruskin, R.; Potential of Subsurface Drip Irrigation for Management of Nitrate in Wastewater;
23. Risse, L., Chesness; J., A Simplified Design Procedure to Determine the Wetted Radius for a Trickle Emitter, ASAE paper # 89-2081, Oct. 1989
24. Rubin, A.R., S. Greene, Sinclair, T., Jantrania, A.; Performance Evaluation of Drip Disposal System for Residential Treatment
25. Wilson, D., Filtration in Drip Irrigation; Technical Proceedings, Irrigation Association Annual Conference, 1980