Monitoring Surface Water Treatment Processes

Washington State Department of Health
Environmental Public Health
Office of Drinking Water

December 2019
DOH Pub 331-620

Table of Contents

1.0 Monitoring Surface Water Treatment Processes 1

2.0 Surface Water Treatment Rules 1

3.0 Surface Water Treatment Rule Monitoring Plan 2

4.0 Acceptable Analytical Methods 2

5.0 Collecting Samples 3

6.0 Measuring Water Quality and Physical Parameters 4

- 6.1 About pH 4
  - 6.1.1 Where, When, and How to Measure pH for CT Compliance 5
  - 6.1.2 Calibration and Verification of pH Meters 5
- 6.2 Temperature 6
- 6.3 Free and Total Chlorine Residual 7
  - 6.3.1 Measuring Chlorine Residual for CT Compliance 7
  - 6.3.2 Distribution Entry Point Residual 7
  - 6.3.3 Distribution System Residual 8
  - 6.3.4 Measurement Technique and Quality Control for Chlorine Residual 8
- 6.4 Turbidity 9
  - 6.4.1 Filtered System Turbidity Monitoring 9
  - 6.4.2 Turbidity Data Recording and SCADA for Rapid Rate Filtration 11
  - 6.4.3 Unfiltered System Turbidity Monitoring 12
  - 6.4.4 Measurement Technique and Quality Control for Turbidity 12
- 6.5 Elements of Contact Time: Flow, Volume, Baffling Efficiency 13
  - 6.5.1 Flow meters and Peak Hourly Flow 13
  - 6.5.2 Verify Contact Volume and Basin Dimensions 15
  - 6.5.3 Verify and Inspect Tank Baffling 15
- 6.6 Calculate Daily Inactivation Ratio 15
  - 6.6.1 Special Situations for Calculating Inactivation Ratio 16
- 6.7 Other Water Quality Parameters: Alternative Disinfectants 17
  - 6.7.1 Ozone 17
  - 6.7.2 Chlorine dioxide 18

6.7.3 Chloramines 19
6.7.4 UV 19
6.8 Special Monitoring for Alternative Filtration Technologies 20
6.8.1 Membrane Filtration 20
6.8.2 Bag and Cartridge Filtration 21
7.0 Critical Alarms and Alarm Set Points 22
8.0 Standard Operating Procedures 23
9.0 Recordkeeping and Reporting 23
10.0 Conclusions 24
Appendix 25
A.1 Sample SWTR Monitoring Plan (Small Slow Sand Filter Plant) 26
A.2 Sample SWTR Monitoring Plan (Rapid Rate Conventional Plant) 27
A.3 Acceptable Methods for Measuring pH, Temperature, and Turbidity 28
A.4 Acceptable Methods for Measuring Residual Disinfectant 29
A.5 Sample SOP: Measuring Turbidity—Hach 2100Q Portable Turbidimeter (0–1000 NTU) 30
A.6 Sample SOP: Measuring Free Chlorine Residual—Hach Pocket Colorimeter II (0.02-8 mg/L) 32
A.7 Sample SOP: Check of Chlorine Test Kit Using Standard Additions-Pocket Colorimeter II 33
Example Standard Additions Data Table 34
A.8 Sample SOP: Measuring pH Using Hach SensION+ Portable Test Kit and 5050T Probe 35
A.9 Recommended On-line Turbidimeter Settings and Monitoring Guidelines: Rapid Rate and Membrane Filtration 36
A.10 Recommended On-Line Turbidimeter Settings Unfiltered Sources and Slow Sand, DE and Bag Filtration Plants 37
A.11 Plumbing Sample to a Process Analyzer—Thoughts to Ponder 38
A.12 Typical Alarm Set Points 41
References 43

Washington State Department of Health

If you need this publication in an alternative format, call 800.525.0127 (TDD/TTY call 711). This and other publications are available at doh.wa.gov/drinkingwater.

1.0 Monitoring Surface Water Treatment Processes

Operators monitor surface water treatment processes to confirm they operate effectively and produce safe water. For the results to be meaningful, every operator must be able to accurately measure key water quality and physical parameters including pH, temperature, chlorine residual, turbidity, and the parameters that effect contact time: flowrate, contact chamber volume, and baffling efficiency. While this document focuses on surface water treatment facilities, most of the information applies equally to any water quality monitoring performed for all public water systems, regardless of source type.

Many states report issues with the water quality data their water systems collect and report. In two separate studies completed in Washington, we found issues with data measurement, recording, or reporting at every participating treatment plant. Nationwide, 15 data integrity workshops held over the past six years found issues at even well operated plants. These findings led us to increase our focus on data integrity, with the goal that all water quality information gathered is trustworthy over its entire life cycle—from the point of sample collection through analysis, storage, retrieval, and reporting to managers, customers, and regulatory agencies.

Achieving quality data you can trust depends on proper installation and maintenance of your equipment, robust calibration and verification procedures, accurate reporting, and integration with SCADA systems. Written standard operating procedures (SOPs) ensures everyone in your utility has access to industry best practices and establishes your expectation that everyone will do things the right way every time.

For each parameter used to monitor surface water treatment plant performance, pay close attention to changes that occur over time, unexpected changes, or changes that can't be explained. Ask yourself; "how do I know this measurement or reading is accurate?" Use the calibration and verification procedures described in Section 6.0 to answer that question.

Data integrity means that the water quality information gathered is trustworthy over its entire life cycle—from the point of sample collection, through analysis, storage, retrieval, and reporting to managers, customers, and regulatory agencies.

2.0 Surface Water Treatment Rules

Surface water sources and sources designated as groundwater under the direct influence of surface water (GWI) carry a high microbial risk. As a result, the basic treatment framework requires the following minimum level of treatment.

- 2-log removal or inactivation of *Cryptosporidium* oocysts.
- 3-log removal or inactivation of *Giardia lamblia* cysts.
- 4-log removal or inactivation of viruses.

For poorer quality surface water sources with the highest risk of contamination, and for water systems operating under a limited alternative to filtration, state rules may require a greater level of treatment than these basic requirements.

Regulatory requirements for surface water treatment facilities (Chapter 246-290 WAC Part 6) stem from multiple federal rules developed over the past three decades.

- Surface Water Treatment Rule (SWTR).
- Interim Enhanced Surface Water Treatment Rule (IESWTR).
- Long Term 1 Enhanced Surface Water Treatment Rule (LT1ESWTR).
- Filter Backwash Recycle Rule (FBRR).
- Long Term 2 Enhanced Surface Water Treatment Rule (LT2ESWTR).

Effective implementation of these rules and protection of consumers depends on a multiple barrier framework: source water protection, filtration, disinfection, and safeguarding treated water within the distribution system—with well-trained, certified operators overseeing all.

3.0 Surface Water Treatment Rule Monitoring Plan

A written monitoring plan ensures you measure the right parameters at the correct frequency and location. You stay on track with regulatory requirements and ensure a smooth transition when staff changes occur.

Your SWTR monitoring plan should reflect the type of treatment installed and population size served. WAC 246-290-664 outlines monitoring requirements for surface water treatment facilities with filtered sources, and WAC 246-290-694 for unfiltered sources. If you use an alternative filtration technology such as membranes or bag filters, or an alternative disinfectant like UV or ozone, you will have additional monitoring requirements established during your plant's design approval process. Contact your Department of Health Office of Drinking Water (ODW) regional office if you have questions about your system's requirements.

Eastern Regional Office 509-329-2100

Northwest Regional Office 253-395-6750

Southwest Regional Office 360-236-3030

Besides the minimum monitoring requirements in the SWTR, your plant operators conduct other water quality monitoring for process control. These are specific to your facility and this guidance does not cover them.

If you have an undocumented or out-of-date monitoring plan, take time now to correct this. Then post it at your treatment plant and review it with your regional engineer during the next sanitary survey. To help you get started, see the two sample monitoring plans in Appendix A.1 and A.2.

4.0 Acceptable Analytical Methods

For consistent and accurate measurements, you must follow EPA-approved or **standard methods**. Appendix A.3 and A.4 list the methods approved for SWTR compliance in Washington. These tables include examples of commercially

available test kits or lab equipment. This is not a comprehensive list. If you have a question about a piece of equipment that does not appear here, contact the manufacturer and ask whether it meets one of the approved methods.

DOH does not allow the use of test strips or visual color-comparator-style test kits for pH and chlorine, because they do not provide accurate and consistent results.

5.0 Collecting Samples

A typical sample is only a tiny fraction of the water delivered to customers. Sample location, hold time, and sampling technique all determine whether analysis results will accurately represent the water treated or delivered to customers.

The first step in collecting a representative sample is choosing the correct location, which accurately reflects what you are measuring. The sample must be well-mixed, but avoid locations with turbulent flow conditions that may entrain air—such as near pumps, valves, and pipe fittings. If there is a chemical injection point upstream, place the sample point downstream after all the chemical mixes. Consider moving the sample point upstream if the added chemical might interfere with the measurement.

When installing sampling taps, it is best to tap the side of the pipe (+/- 45 degrees). This avoids any trapped air at the top of the pipe and sediment that may settle on the bottom. Use a sampling quill to sample near the center of the pipe and avoid more stagnant conditions and biofilm fouling on the inside surface.

Timing is critical for many water quality parameters. Measure temperature and pH immediately. Perform chlorine residual measurements as soon as possible. You can hold turbidity samples for several minutes, but swirl the sample if particles are present and settling out.

Don't aerate the sample because that will change the sample result. Remove aerators and control the sample flow to produce a smooth pencil-sized stream. When collecting samples, rinse the sample container or vial and cap three times with sample water before filling to the appropriate measurement level.

When installing online analyzers, avoid pumping the sample if you can, because pumps can entrain air or change the characteristics of the sample. If you must pump the sample, avoid pumps that cause pulsation such as piston, diaphragm, or peristaltic pumps, or use a pulsation dampener. Take steps to minimize sample delay. Aim for a sample delay of one minute or less. Keep sample lines as short as possible and use the smallest diameter sample line that will deliver the required flow to the instrument. This will decrease sample delay and discourage biofilm. Replace sample tubing regularly, especially if you have high levels of iron or manganese.

Follow the manufacturer's instructions when installing online monitoring equipment. It is important to control flow and pressure for all instruments, but

Plumbing Process Analyzers

Choose a representative location.

Tap the side of the pipe (+/- 45°) and use a sampling quill.

Don't mix and match plumbing materials.

Keep sample lines short (less than 1 minute sample delay is ideal).

Replace tubing regularly.

Avoid pumping if you can.

Control flow and pressure.

especially for turbidimeters, particle counters, and amperometric chlorine analyzers. See Appendix A.11 for more information.

6.0 Measuring Water Quality and Physical Parameters

Most surface water treatment plants use a combination of filtration and disinfection. To ensure these treatment processes operate effectively, all surface water treatment plants measure turbidity and distribution system chlorine residual. Systems using free chlorine for primary disinfection, measure pH and temperature in addition to free chlorine residual because the effectiveness of chlorine depends on these parameters. Systems using alternative disinfectants such as ozone, chlorine dioxide, or ultraviolet radiation (UV) have special monitoring requirements unique to those technologies.

Failure to use proper methods and procedures can cause significant errors. A study of treatment plants in Washington found that pH, temperature, and chlorine residual measurement errors caused calculated *Giardia* inactivation ratios to be off by up to 40 percent.

6.1 About pH

pH is a measurement of the hydrogen ion concentration. It represents the relative acidity of an aqueous solution and is a negative logarithmic function. This means that every one-unit decrease in pH represents a ten-fold increase in acidity. For example, a pH 6 solution is ten times more acidic than a pH 7 solution. The most important thing to remember is that free chlorine disinfecting power depends on pH—the lower the pH, the more effective the chlorine.

When you add chlorine to water, it forms hypochlorous acid (HOCl) and hypochlorite ion (OCl^-), the two components of free chlorine. HOCl is the much stronger disinfectant—more than **three times** more powerful than OCl^-—in inactivating *Giardia* cysts. As seen in Figure 1, the relative amount of these two compounds depends on pH. At pH 6, for example, more than 95 percent of free chlorine is present as HOCl. At pH 9, less than 5 percent of free chlorine is HOCl. For these reasons, you need accurate pH measurement to ensure disinfection is effective.

Figure 1

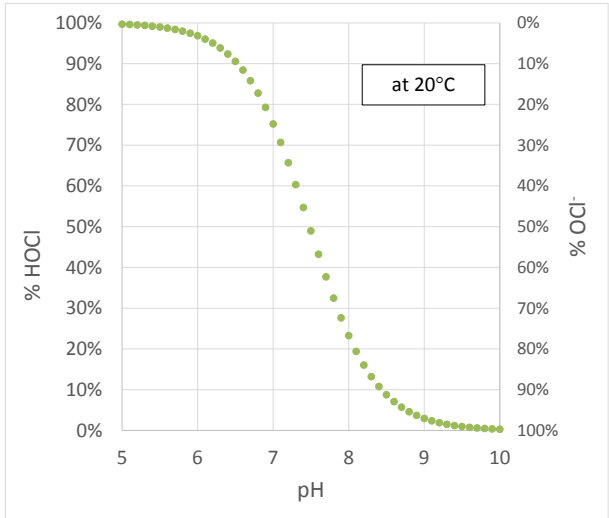

In addition to its role in disinfection, pH monitoring is important because it indicates whether you are maintaining optimal conditions for other installed treatment. For example:

- Some coagulants work best in certain pH ranges.
- Removal of inorganics and organics depends on pH.
- Minimum pH requirements may be part of optimal corrosion control treatment under the Lead and Copper Rule.

- When adding pH adjustment chemicals, pH-monitoring controls chemical feed pumps and helps maintain dosages in the correct ranges.
- Along with your alarm system, pH monitoring helps detect chemical overfeeds.

6.1.1 Where, When, and How to Measure pH for CT Compliance

Surface water systems using free chlorine for primary disinfection must measure pH at the **end** of each disinfection sequence. If you adjust pH part way through a chlorine contact basin, you'll need multiple monitoring points for representative sample results. Measure pH at least once per day during peak hourly flow. If you take multiple samples during the day or monitor continuously, and flow through the contact basin is relatively constant, you may use the highest pH value for the day in your CT calculation.

pH measurements are sensitive to both time and temperature. If you collect a sample and don't analyze it right away, pH will change as the sample is exposed to air. Likewise, pH measurements are not stable and reproducible when the sample temperature changes. For these reasons, measure your field samples in the field. Do not transport them back to the lab for analysis.

Before taking a grab sample measurement, allow the pH probe to come to the same temperature as the water you're sampling. Do this by letting the probe sit in a large container of the sample water for at least five minutes. Then collect a fresh water sample and take a reading.

The sidebars list tips for accurate grab and online pH measurements.

Measuring pH

Grab Samples

Calibrate your meter with at least two buffers every day you use it.

Use fresh (unexpired) calibration solutions.

Allow the probe to adjust to the water temperature

Measure your sample **immediately** after collecting it. Avoid transporting the sample to another location.

Gently swirl or stir the sample gently to minimize air bubbles.

When measuring low-conductivity water (<100 umhos), consider using a specialized probe.

6.1.2 Calibration and Verification of pH Meters

You must calibrate your portable or laboratory pH meter regularly. If your unit does not include a calibration feature, replace it with one that does. Follow the calibration instructions in your instrument manual. When calibrating, use at least two buffers, ideally bracketing the pH of your water—one higher, one lower. Pay strict attention to expiration dates and store buffers in closed containers. Avoid storing them close to a window or heat source. Be aware that pH 10 buffers are unstable and have a limited shelf life, so if you choose to use pH 10, make sure you have robust quality control procedures. Refrigerate pH 10 buffer and allow it to come to room temperature prior to use. For typical pH ranges found in drinking water, a pH 8 buffer may be a better choice.

Verify your meter between calibrations with a single-point verification using fresh buffer in the range of measurement. Don't use the same buffer you used to calibrate the instrument. For example, if you normally calibrate with pH 4 and 7 buffers, you could choose a pH 6.86 buffer by a different manufacturer for your verification check. Recalibrate if the pH meter does not accurately read the buffer (within +/-0.1 pH units).

EPA-approved methods vary somewhat on the minimum frequency of calibration for portable or bench-top pH meters. Most water quality labs follow standard methods (4500H+) and calibrate their pH meters each day they are used. EPA Method 150.3 allows weekly calibration, as long as a daily verification check

shows the probe has not drifted. Although this practice is allowable, we recommend following industry best practice by calibrating portable or bench-top meters daily.

Some utilities use online pH meters for compliance monitoring. Follow the manufacturer's instructions for installation, operation and maintenance, including calibration frequency of the continuous monitoring pH meter. Always recalibrate whenever you do any maintenance on the probe, or whenever you no longer obtain a good verification. Well-managed utilities calibrate online pH probes at least every two to three months. If your online probe is not designed to be removed follow the grab sample adjustment procedure in EPA method 150.3, section 10.3.

Measuring pH: Online Analyzers

Make sure your instrument has temperature compensation.

Provide stable flow and pressure.

Calibrate the probe as recommended by the manufacturer.

Verify the probe every day.

Like laboratory or portable equipment, calibrate online meters with at least two buffers that bracket the expected pH of the water. You must verify online pH meters every day (EPA Method 150.3). Do this by grab sample comparison with a portable or laboratory instrument or by removing the probe and measuring a sample of known concentration, such as a commercial pH buffer in the range of measurement.

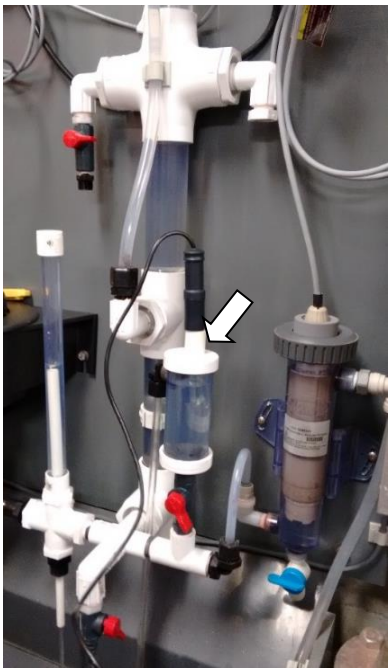

You must recalibrate the probe if the two instruments are more than 0.2 units apart or readings vary by more than +/-0.1 units from the known standard. When comparing a continuous online instrument to a bench top unit, it is critical to minimize or eliminate differences between the two water samples. Temperature, flow characteristics across the probe, and trapped air can affect resulting pH values. Carrying samples from the online analyzer to the lab introduces errors. Instead, bring your portable pH meter to the online analyzer. Allow the portable pH probe to come to the same temperature as the water before taking a reading. One excellent approach is to install an empty flow-through cell next to the pH analyzer, as shown in the photo (right) from the Cedar River Water Treatment Plant. This allows you to place the portable probe into the sample flow where it can adjust to the water temperature and measure the exact same water as the online probe without disturbing it. If you do not have this type of sample setup, we recommend installing one..

Portable or online meters may not stabilize correctly when measuring low ionic strength water (conductivity < 100 uS/cm2). Contact your equipment manufacturer to confirm your procedure and discuss whether a specialized probe or low ionic strength buffers could help.

6.2 Temperature

Chlorine disinfection is less effective at lower temperatures. For example, it takes more than three times more chlorine residual to inactivate the same amount of *Giardia* cysts at 5º C than at 20º C (pH 7). For most surface water systems in Washington, winter cold-water temperatures (2-5 ºC) produce the most challenging conditions for meeting SWTR disinfection requirements.

You must measure temperature for CT compliance at the **end** of each disinfection sequence and at least once per day during peak hourly flow. If you take multiple

samples during the day or monitor continuously, and flows entering and leaving the contact basin are nearly the same, it is acceptable to use the lowest daily temperature value in your CT calculation.

Temperature changes rapidly after you collect a sample, so don't delay in reading the thermometer. You can also use a properly calibrated online temperature probe.

Once or twice per year, check the thermometer against an NIST-certified precision thermometer. NIST is the U.S. National Measurement Institute. NIST certification means a certified laboratory calibrated the device using an NIST reference standard and it meets exacting requirements.

Do a quick thermometer verification check by placing it in a beaker of ice water. It should read 0º C. Verify an online probe by comparing it to another properly calibrated thermometer.

6.3 Free and Total Chlorine Residual

Water systems use chlorine to kill pathogens such as *Giardia* and viruses (primary disinfection), and to maintain a protective residual and prevent biological regrowth in the distribution system (secondary disinfection). Operators of chlorinated systems must measure free or total chlorine residual at three locations: 1) the end of each disinfectant sequence; 2) the distribution entry point; and 3) representative points in the distribution system.

6.3.1 Measuring Chlorine Residual for CT Compliance

You must take chlorine residual measurements for CT compliance (*Giardia and* virus inactivation) from the **end** of each disinfection sequence, at least once per day during peak hourly flow. If using grab samples, use the previous day's records to estimate when peak hourly flow will occur. If monitoring continuously, use the value during peak hourly flow to calculate the daily inactivation ratio. If flows entering and leaving the contact basin are nearly the same, you may use the lowest daily value in your CT calculation.

6.3.2 Distribution Entry Point Residual

Most systems with a single disinfection sequence use the CT compliance point for distribution entry. **Larger systems** (population above 3,300) must continuously measure free chlorine residual at the distribution entry point and report the lowest daily value. If continuous monitoring is required and the analyzer fails, you must take grab samples every four hours and have the analyzer repaired and running within five working days.

Smaller systems may use grab sampling at the distribution entry point, one to four times per day, depending on population served. Systems using grab sampling take one sample at peak hourly flow and space the remaining samples

Chlorine Residual Tips
Grab Sampling

Measure **free** chlorine residual, unless you use chloramines.

Clean sample vials thoroughly after every use. Using lab wipes or lint free wipes can help keep your sample vials scratch free.

Periodically replace sample vials (when scratched or discolored).

Discard expired reagents.

First, read the blank, then the sample. Use the same vial to zero the instrument and measure the sample.

For free chlorine, read the result promptly (within one minute of adding the reagent).

Pay attention to low and high range settings on your instrument.

over the period that the plant produces water. Record the lowest grab sample result.

For all systems: If the free chlorine residual at the distribution entry point ever drops below 0.2 mg/L, you must call your DOH regional office as soon as possible, but no more than 24 hours after you learn of the event.

6.3.3 Distribution System Residual

All systems must measure distribution chlorine residual at representative locations throughout the distribution system. Do this at least daily and at the same time and location as you collect each coliform sample. Most systems measure free chlorine. However, systems using chloramines for a secondary (distribution) residual must measure total chlorine or combined chlorine (total minus free) in the distribution system.

Chlorine Analyzer Tips

Install the equipment properly (refer to the equipment manual).

Follow the manufacturer's recommended maintenance schedule.

Verify your instrument at least every five days (should be within 15 percent or 0.1 mg/L, whichever is greater)

Check the sample flowrate (CI-17)

6.3.4 Measurement Technique and Quality Control for Chlorine Residual

Tips for accurate grab and online chlorine measurements are in the sidebars. There is a detailed discussion of plumbing for process analyzers in Appendix A.11.

If you use a portable DPD test kit to measure grab samples, verify the instrument at least once every quarter. Do this by comparing it to a laboratory instrument, or by measuring a sample with a known concentration, a chlorine standard, or other method the manufacturer recommends. If the unit does not read accurately (+/- 0.1 mg/L), you must repair or replace it. Use a secondary standard to verify your instrument is working, but remember that a secondary standard only checks the instrument. It does not check your reagents, your glassware, or your technique.

Immediately after opening a fresh batch of DPD reagent, run a reagent blank. First, zero the instrument with a sample cell filled with deionized or distilled water, then add reagent to the sample and take a reading. Write the resulting value on the DPD container. Subtract this value from all future sample results using this batch of reagent. If the reagent blank reads high, more than 0.01 or 0.02 mg/L, there may be a quality control problem with the reagent and you should replace it. The photo below shows three containers of powdered DPD reagent with the same lot number. Along with the obvious difference in color, the reagent blanks made from these samples ranged from 0.05 mg/L on the left to 0.13 mg/L, on the right.

Photo courtesy of Emilia Blake, Skagit County PUD.

If you use an online chlorine analyzer, you must verify it against a laboratory or portable instrument at least once every five days. Results must be within +/- 0.1 mg/L or 15 percent, whichever is larger. Water systems in Washington usually use colorimetric or amperometric chlorine analyzers. Colorimetric online analyzers, such as the Hach Cl-17, rely on factory calibration, proper installation, and regular maintenance to produce accurate results. Amperometric analyzers require less maintenance, but rely primarily on verification checks to ensure accuracy. When using an amperometric probe or sensor for SWTR compliance, you must follow the detailed quality control procedures described in EPA method 334.0. These include proof of performance and routine quality control procedures for the grab sample reference method, each sample collector, and each online analyzer. If you use amperometric probes, read the complete method for details.

Amperometric free chlorine sensors generally measure only HOCl, not OCl^-. In normal pH ranges of most water systems (7.0 to 8.0), the ratio of the two species of free chlorine is very sensitive to pH (see Figure 1). For this reason, amperometric analyzers used in drinking water should always have continuous pH compensation.

At pH 8.0 or greater, HOCl is only a small part of free chlorine (< 20 percent). In this setting, small changes in pH or chlorine residual can affect amperometric sensor accuracy and cause it to drift, even with pH compensation. Because the DPD method measures all free chlorine species and is independent of pH, it may be a better choice in this case.

6.4 Turbidity

Turbidity is a measurement of scattered light from suspended solids. The higher the intensity of scattered light, the higher the turbidity. For rapid rate filtration, turbidity measurements show how effectively your filtration system removes particles, including pathogens like *Giardia* and *Cryptosporidium*. At slow sand, diatomaceous earth (DE), and bag filtration plants, operators use turbidity measurements to verify filtration processes are working correctly and removing pathogenic organisms from the source water. In both unfiltered and filtered sources, turbidity monitoring also verifies that turbidity does not reach levels that could interfere with disinfection.

Most surface water systems use continuous meters for turbidity monitoring. A surprising number of factors affect the accuracy of the turbidimeter data generated, recorded, and reported, such as instrument settings, physical locations, electronic data manipulation, operational practices, and human actions. See Appendix A.9 and A.10 for recommended settings for online turbidimeters.

6.4.1 Filtered System Turbidity Monitoring

Systems with filtered surface water sources measure turbidity at up to four locations: the untreated source water, after the settling or clarification process, after each individual filter, and in the combined filter effluent (CFE).

Collect source turbidity samples before disinfection and chemical addition. If using grab samples, collect a representative sample after plant startup when it's

running smoothly. If monitoring continuously, record the daily average value on the monthly operations report (MOR). If your system recycles backwash water to the head of the plant, measure raw turbidity prior to (upstream from) the recycle point. You also should measure recycled water turbidity for process control purposes.

If your plant has a settling or clarification process, we recommend measuring effluent turbidity from each settling or clarification basin. This can identify problems such as short circuiting, which may cause one basin to perform more poorly than another. If monitoring continuously, record the daily average value on your MOR. If using grab samples, collect a representative sample after startup when the plant is running smoothly. If you collect multiple grab samples, report the average value.

The CFE is a point that best represents the water quality produced by all filters combined. Because of differences in filter piping and clearwell configuration, the exact CFE location may vary from plant to plant. In general, the best place is a common header pipe that collects water from individual filters before they flow into the clearwell. Because of piping differences and layouts at each plant, operators sometimes struggle to find a suitable CFE location. We encourage systems with only two filters and no good CFE sampling location to report the highest individual filter effluent (IFE) reading as the CFE on their MOR. Many of these systems operate only one filter during low demand periods, so there is no difference between IFE and CFE during these periods.

Larger systems with multiple filters, all discharging directly and separately into a common clearwell, should use a pumped sample from an appropriate clearwell location. The sample location should have completely mixed water from all filters and be as close as possible to the point where the filters discharge into the clearwell. Appendix A.11 discusses sample pump selection.

Filtered systems must report turbidity readings to DOH each month (WAC 246-290-666). Although the rules allow daily grab sampling for small systems using simple filtration technologies, such as slow sand or bag filtration, most systems monitor turbidity continuously using online analyzers.

For rapid-rate filtration plants, you must record the CFE turbidity readings every four hours and report them on your MOR. For plants operating continuously, report the value at midnight, 4 a.m., 8 a.m., and so on. For other plants, report the first value within 15 minutes after initial plant startup (filtered water flowing to the clearwell or distribution) and then at exactly four-hour intervals for as long as the plant continues to run. If your plant does not operate continuously throughout the day, record a new initial turbidity reading within 15 minutes of plant restart, and then every four hours thereafter. The daily maximum CFE turbidity measurement is the highest turbidity of water your plant produces and sends to consumers at any time during the calendar day. It is not the maximum of the four-hour readings.

Rapid rate filter plants using direct, inline, or conventional filtration also must measure turbidity continuously from each individual filter. For process optimization, locate IFE sample points immediately after the filters and before

filter to waste piping to allow turbidity monitoring during filter to waste. Record IFE turbidity results at least every 15 minutes. If IFE turbidity values exceed 0.5 NTU in two consecutive measurements, you must report this on the MOR. Do not report IFE turbidity measurements taken during backwash or filter to waste.

6.4.2 Turbidity Data Recording and SCADA for Rapid Rate Filtration

Most systems record turbidity data on a SCADA computer in a data log. SCADA system data logs must be able to handle long-term turbidity data storage needs based on monitoring requirements described in the previous section. For example, rapid rate plants must store and be able to easily extract 15-minute IFE, four-hour CFE and daily maximum CFE results. Data storage systems also must meet minimum turbidity data-retention requirements of at least five years.

The Washington Treatment Optimization Program (TOP) is an effort to improve performance of rapid-rate surface water treatment facilities. TOP focuses on particle removal and disinfection to maximize public health protection from microbial contaminants. ODW adopted performance goals for all rapid-rate surface water treatment plants in the state. For turbidity data, these include:

- Filtered water is less than 0.10 NTU 95 percent of the time, based on maximum daily values recorded.
- Filtered water is below 0.10 NTU within 15 minutes of putting filter in to production.
- Settled water turbidity is less than or equal to 2 NTU 95 percent of the time when annual average source turbidity exceeds 10 NTU.
- Settled water turbidity is less than or equal to 1 NTU 95 percent of the time when annual average source turbidity is less than or equal to 10 NTU.
- The system monitors raw water turbidity at least every four hours, and continuously records effluent turbidity for each filter and the combined filter effluent.

To help plant operators achieve turbidity optimization goals, you should log data more frequently than required. For optimization, capture and record data at intervals of one minute or less, or record maximum IFE and CFE values for each 15-minute period. You should create the data log daily in an easily accessible format (e.g., csv, xlsx), including date, time, and turbidity value for each continuous-reading turbidimeter.

Tag logged turbidity data to identify plant operating-conditions (filter-to-clearwell, filter-to-waste, backwash, out of service, and so on). Keep data log files in an easily accessible directory. Program SCADA monitoring systems to allow operators to create their own trend lines using flexible turbidity and time scales. The SCADA system also should allow operators flexibility to create plant-specific control screens showing selected trend lines (selected filter IFE turbidity, filter flow rate, and valve open-closed positions for the selected filter in the same view).

6.4.3 Unfiltered System Turbidity Monitoring

Systems with unfiltered surface water sources must continuously measure turbidity immediately before the first point of primary disinfectant application (WAC 246-290-694). The 5 NTU maximum turbidity limit for unfiltered systems is designed to prevent particles from shielding microorganisms from disinfection. This is extremely important, because these systems lack a filtration barrier. Report the maximum turbidity value for the day on the MOR.

In unfiltered surface water systems, source water turbidity values above 1.0 NTU trigger additional coliform monitoring requirements. See WAC 246-290-694(1) and (3).

6.4.4 Measurement Technique and Quality Control for Turbidity

When using portable or laboratory turbidimeters, better technique usually leads to lower and more accurate measurements. Tips for accurate grab-sample turbidity measurements are in the sidebar. Section 5.0 and Appendix A.11 have general tips on plumbing process analyzers.

Turbidimeter calibration and verification requirements are in WAC 246-290-638(4). You must:

- Calibrate all turbidimeters using a primary standard according to the manufacturer's instructions.
- Calibrate devices that use an incandescent light source at least once per quarter.
- Calibrate devices that use an LED or laser light source at least annually (or more frequently per the manufacturer's recommendation).

In addition to primary calibration, you must verify continuous online turbidimeters at least weekly by comparing them to a calibrated bench-top turbidimeter. This verifies that continuous units maintain accuracy between quarterly calibrations, and maintains operator proficiency with the bench-top unit. If a continuous unit fails, you must use the bench-top unit for ongoing turbidity monitoring.

Results between the continuous and bench-top units may not match exactly. Generally, bench-top units read a higher turbidity. An acceptable difference between the values is the larger of +/- 0.05 NTU or 10 percent. Record weekly verification values in a turbidimeter-specific maintenance logbook. You may use secondary standards, such as the Hach ICE-PIC® or similar device, in lieu of a grab sample verification.

If your turbidimeter uses an incandescent light source, you will need to replace the lamp periodically (usually annually). Check your equipment manual for this and other required maintenance.

Turbidity Tips—Grab Sampling

Calibrate your instrument using a primary standard.

Replace calibration standards when expired.

Use clean scratch-free sample cuvettes. Replace them often.

Use laboratory wipes only (not your shirt) to wipe the cuvette before placing it in the instrument.

Use silicon oil to mask minor imperfections, but be sure to wipe off excess oil thoroughly with a clean lab wipe.

Carefully follow instrument manufacturer's instructions. Check the internet—many manufacturers post useful videos covering the proper use and calibration of their equipment.

6.5 Elements of Contact Time: Flow, Volume, Baffling Efficiency

Effectiveness of free chlorine disinfection depends directly on the length of time chlorine is in water. This is known as contact time, or "T." The SWTR establishes disinfection levels that achieve the required inactivation of *Giardia* and viruses under different water quality conditions. In SWTR "CT tables," C is the residual disinfectant concentration in mg/L, and T is the contact time in minutes. Section 6.6 describes how to use your actual available CT value, CT_{calc} and compare this with the required CT value, $CT_{required}$ to calculate the inactivation ratio. You must make this calculation each day your system produces water for the public.

Contact time (T) is not measured directly. It is calculated from flow, volume, and the baffling efficiency of the contact basin, as follows.

Time = (Volume x Baffling efficiency)/Flowrate

Baffling efficiency is a measure of short-circuiting in the contact basin. The value ranges from 0 to 1.0 and is established for each contact basin using a tracer study or empirical calculation that ODW must review and approve. A higher baffling efficiency means there is little or no short-circuiting in the basin. A low baffling efficiency (0.1 or less) means significant short-circuiting, which reduces the residence time in the basin.

A "bump test" is a quick way to determine whether your assumed contact time is realistic. Temporarily increase the chlorine dose by 50 to 100 percent and see how long it takes for the higher chlorine residual to reach the end of your contact basin. If it is a lot different from the contact time used for that flow rate, investigate further. You might have to change your high chlorine alarm set point temporarily during the test. Remember to turn the chlorine feed pump back down and restore the alarm set point when you're done.

6.5.1 Flow meters and Peak Hourly Flow

Peak hourly flow is the greatest volume of water passing through the disinfection contact chamber during any one hour in a consecutive 24-hour period. It is not the absolute peak flow occurring at any instant during the day. For a contact basin where water levels fluctuate, peak hourly flow is the **larger** of the flow into the contact basin (from the treatment plant) and the outlet flow (to the distribution system). Start by ensuring you have meters installed to measure both the flow rate from the plant into the clearwell and from the clearwell out to the distribution system.

When selecting, installing, operating, calibrating, and maintaining meters, you must follow accepted industry standards and manufacturer information (WAC 246-290-496 (3)).

Inaccurate flow measurements and false assumptions can be the largest source of error in determining disinfection contact time. The best way to determine peak hourly flow is by direct measurement using a properly installed and calibrated water meter. The accuracy of meters can deteriorate with age; damaged or older meters can produce incorrect readings. For accurate data, make sure your system uses the correct type of meter, properly installed, and regularly inspected and calibrated. For large source meters, **Flowmeters in Water Supply** (AWWA M33) is a manual of practice accepted across the water industry. For smaller meters in use at some very small facilities, refer to **Water Meter Selection, Installation, Testing**

and Maintenance (AWWA M6). For meter-specific information, consult the equipment manufacturer's relevant manual.

When selecting meters, consider the range of flow under which the system operates, the size of the pipe, how much pressure loss you can tolerate, and your automation and data recording needs. Your meter vendor should be able to help you verify that you have the correct meter type for your application. Tables like the one below can help you get started.

To get accurate results, you must install meters properly. One of the most common meter installation mistakes is not allowing enough straight run pipe upstream and downstream from the meter. Read the equipment manual carefully and consult the manufacturer to make sure the installer followed correct procedures.

Inspect and calibrate all meters periodically as part of a scheduled maintenance program. Meters with moving parts require calibration more frequently. AWWA M33 recommends that you recalibrate turbine or propeller meters every year. Ultrasonic meters may need recalibration to account for pipe corrosion or scale build-up that occurs over time. Consult your equipment manufacturer for specific recommendations. Beware that flow meter calibration can change the measurement range. If the 4 to 20 mA scaling is not adjusted to compensate SCADA will display incorrect readings. After calibration, check the local meter display against the SCADA screen and make sure the flowrates match.

Most Common Flow Meter Types General Guide

Flowmeter Type	Pipe Sizes	Pressure loss	Typical accuracy in percent	Required length of straight pipe upstream of meter	Required length of straight pipe downstream of meter
Electromagnetic full pipe meter	4", 6", 8", larger sizes available by order	None	±0.5 % of rate	5 or less Consult dealer and specification sheet	2 or less Consult dealer and specification sheet
Electromagnetic insertion meter	3" to 48"	None	±1 % of full scale	10 times pipe diameter	5 times pipe diameter
Ultrasonic (time-of-travel)	1" to 60" or more	None	±2 % of full scale	10 times pipe inside diameter	5 times pipe inside diameter
Propeller	2" to 96"	Low	±2 % of reading	5 to 10 diameters	1 to 2 diameters
Positive displacement	5/8" to 2"	High	±1.5 to 2 %	Minimal	Minimal
Vortex	2" to 20"	Low to medium	±1 % of full scale	10 times pipe diameter	5 times pipe diameter

Adapted from Washington Department of Ecology, fortress.wa.gov/ecy/wrdocs/WaterRights/wrwebpdf/gsfps.pdf.

Some meters have internal diagnostics that can indicate a problem (Incontri, 2017). Consult with your equipment manufacturer to learn about your meter's capabilities. As a simple check, run a tank drawdown test once a year to confirm your flow meter reads accurately.

6.5.2 Verify Contact Volume and Basin Dimensions

A surprising number of systems use incorrect volumes to calculate disinfectant contact time. You must know the underlying assumptions contained in your contact time calculation and independently verify the values are correct. If you haven't done so already, measure the disinfection contact tank or pipeline dimensions and make sure the volume used to calculate contact time for your system is correct.

If the water level in your contact basin fluctuates, you must know the tank level to calculate volume accurately. If you base your calculation on a minimum tank level, you must know what it is, and verify your tank does not drop below it. Record the minimum tank level on your MOR every day and verify it does not fall below that minimum level.

Operators use various devices to measure the depth of water in a disinfectant contact tank. If you rely on an instrument, such as a pressure transducer or ultrasonic level indicator for determining depth, check the device at least once per year. Do so by directly measuring the water level with a tape measure and comparing it to the instrument reading and the value displayed on your SCADA screen, if you have one.

Contact Volume Tips

Verify the dimensions of your contact basin or pipe.

Periodically check that level indicators are working properly.

Regularly inspect baffle curtains.

6.5.3 Verify and Inspect Tank Baffling

Some plants have flexible baffle curtains to create a maze-like pathway, reducing short-circuiting and increasing disinfectant contact tank residence time. Inspect these critical system components regularly. If visual inspection is possible without entering the tank, check baffle curtains monthly. If visual inspection is difficult, the simple bump test described above can confirm that the baffles are intact. At a minimum, include baffle integrity as part of your comprehensive tank inspection program. AWWA Standard G-200 recommends that storage tanks receive a comprehensive inspection every three to five years.

6.6 Calculate Daily Inactivation Ratio

State and federal drinking water rules require that filtration and disinfection systems together achieve at least 2-log (99 percent) removal or inactivation of *Cryptosporidium*, 3-log (99.9 percent) removal or inactivation of *Giardia* cysts, and 4-log (99.99 percent) removal or inactivation of viruses. DOH can increase these requirements if source water quality is poor. For filtered systems, pathogen removal credit granted to the filtration process determines the disinfection level the system must provide. Properly designed, well-operated filtration plants achieve at least 2-log removal of *Giardia* cysts and 2-log removal of *Cryptosporidium* oocysts. Regardless of the removal credit granted to the filtration process, all filtered systems must provide at least 0.5 log (68 percent) inactivation of *Giardia* cysts and 2-log inactivation of viruses.

When using free chlorine, you can safely assume that meeting the *Giardia* inactivation requirement also satisfies virus inactivation requirements. Because chlorine is ineffective against *Cryptosporidium*, treatment plants rely on filtration

or an alternative disinfectant to meet the minimum treatment level for that organism. Section 6.7 covers alternative disinfectants.

Water systems using free chlorine for primary disinfection must measure free chlorine residual, temperature, and pH to determine *Giardia* inactivation requirements. The required level of disinfection is expressed in terms of C x T values in mg/L-min and is referred to as $CT_{required}$. This is compared with CT_{calc}, the product of the disinfectant residual and the corresponding contact time measured every day at your plant. The ratio of CT_{calc} values your treatment facility achieves to $CT_{required}$ is known as the inactivation ratio (IR).

$$\text{Inactivation Ratio (IR)} = CT_{calc}/CT_{required}$$

For effective disinfection, the IR always must be greater than 1.0. When establishing feed pump settings and alarm set points, we recommend you use a more conservative minimum target IR of 1.2 to 1.5. This provides an extra safety margin and helps ensure the water always receives adequate disinfection.

The MOR forms available on our website automatically calculate $CT_{required}$, CT_{calc}, and IR using the EPA CT tables (USEPA 1991) and water quality and treatment plant data you enter. **Remember to calculate your IR every day!** One of the most common mistakes operators make is to wait until the end of the month to fill out the monthly report and calculate the inactivation ratio. This can place consumers at risk and leaves no chance to correct a disinfection problem before incurring a violation.

6.6.1 Special Situations for Calculating Inactivation Ratio

The EPA CT tables in the SWTR use pH increments of 0.5 units and temperature increments of 5ºC. If you use these tables to determine $CT_{required}$ manually, you must round the measured temperature down and the pH up to the nearest table increment. Although conservative, we do not recommend this approach because it may falsely indicate a treatment technique violation that does not exist. Instead, use linear interpolation, the method used in standard ODW reporting forms.

EPA published several equations to estimate CT. If you use an EPA-accepted equation to calculate $CT_{required}$, be aware that it may produce overly conservative values under some water quality conditions. We do not recommend them for this reason. If you use an equation and it shows that you have a treatment technique violation, always double check against EPA tables before submitting your report.

The EPA CT tables in the SWTR do not cover pH values greater than 9.0. If you experience high raw-water pH levels due to an algal bloom or other unusual event, contact your regional office to discuss the situation. For high pH conditions, use the following CT values for *Giardia* inactivation.

CT values for 0.5 log[1] *Giardia* inactivation using free chlorine, temperature = 5°C[2], free chlorine residual = 1.0 mg/L[3]

pH	9.5	10.5	11.5
CT	60	105	192

1. *For 1.0 log inactivation, multiple the CT values by two.*
2. *For temperatures other than 5°C, assume a two-fold decrease in CT values for every 10°C increase in temperature.*
3. *For chlorine residual concentrations (C) other than 1.0 mg/L, multiply the values by $C^{0.15}$, up to a maximum of 3.0 mg/L.*
4. *From EPA 40 CFR Parts 141 and 142, National Primary Drinking Water Regulations: Interim Enhanced Surface Water Treatment Rule Notice of Data Availability; Proposed Rule, Vol. 62, No. 212 (November 3, 1997).*

6.7 Other Water Quality Parameters: Alternative Disinfectants

A small number of Washington utilities use alternative disinfectants such as ozone, chlorine dioxide, chloramines, or ultraviolet radiation (UV) in addition to, or instead of, free chlorine. These systems have special monitoring requirements normally established during the design review and approval process.

6.7.1 Ozone

Water systems using ozone for primary disinfection of surface water sources must provide specific levels of *Giardia* and virus inactivation based on their filtration technology, ozone residual concentration, and temperature. You cannot use ozone for secondary disinfection because the residual is unstable. EPA established CT values for inactivation of *Giardia* and viruses (USEPA 1991) with ozone. Because pH doesn't affect ozone effectiveness, the tables apply over a wide range, from pH 6 to pH 9.

Daily CT monitoring for ozone includes ozone residual and temperature. Take measurements at least once per day during peak hourly flow. Because ozone is unstable in water, systems often use a decay curve and/or multiple monitoring points to maximize the disinfection credit they receive under the SWTR. Your water utility, design engineer, and ODW establish CT calculation procedures during the facility design approval process. In the absence of an approved decay curve procedure, you must measure ozone residual at the end of the contact pipe or basin and use that value in your daily CT calculations.

The indigo colorimetric method is the only analytical method available to measure ozone residual for compliance (SM 4500-O3 B). Appendix A.4 lists some available test kits that use this method. Read your instrument's instruction manual carefully. Some test kits require you to zero the instrument on a distilled water blank, others to zero on the sample with the reagent added.

Ozone is highly reactive, so you must analyze the sample immediately and carefully follow procedures in the method for accurate results.

As with chlorine, set your instrument to the appropriate range (low, medium, high) for the ozone concentration you are measuring. Also, make sure to use the

correct reagent for the instrument range setting. Once per quarter, verify the test kit works properly by comparing it to another properly calibrated instrument, or using another method the manufacturer recommends. If the unit does not read accurately, repair or replace it.

Online instrumentation is available for process control. Verify online ozone analyzers by grab sample comparison every day.

Ozone is usually more effective at inactivating viruses than *Giardia*. Under some water quality conditions, however, the ozone dose needed to inactivate viruses is higher than that needed to inactivate *Giardia* cysts. For this reason, you must calculate and report the inactivation ratio for both *Giardia* and viruses every day.

Ozone can react with naturally occurring bromide to form bromate, a disinfection by-product with a maximum contaminant level (MCL) of 0.010 mg/L. If you operate a community or nontransient noncommunity water system and use ozone, you must collect monthly samples for bromate at the distribution entry point.

6.7.2 Chlorine dioxide

Chlorine dioxide is a powerful disinfectant used for primary and secondary disinfection. Water systems in Washington rarely install it, but hospitals and other buildings sometimes use it to control growth of *Legionella* in building plumbing systems. Installing treatment at a building can trigger state drinking water rules. See *When an Institutional Building Becomes a Water System* (331-488) for more information.

EPA developed *Giardia* and virus inactivation tables for chlorine dioxide. The calculation for the daily inactivation ratio is similar to that used to calculate free chlorine (USEPA, 1991). Like ozone, the disinfection effectiveness of chlorine dioxide is relatively independent of pH. Daily CT monitoring includes chlorine dioxide residual and temperature. You must take measurements at least once per day during peak hourly flow. Collect samples from the end of the contact pipe or basin and use the result in your daily CT calculations.

Analytical methods and examples of available testing equipment are in Appendix A.4.

Monitoring requirements for chlorine dioxide are complex and you must use special report forms to ensure you complete the required monitoring. EPA established a maximum residual disinfectant level (MRDL) of 0.8 mg/L for chlorine dioxide. Exceeding the chlorine dioxide MRDL at the distribution system entry point triggers a distribution-system monitoring requirement the following day. Exceeding the MRDL within the distribution system or failing to take required distribution system samples triggers a Tier 1 public notice, which you must deliver to customers within 24 hours.

Chlorine dioxide can form chlorite ion, a disinfection by-product with an MCL of 1.0 mg/L. If you operate a community or nontransient noncommunity water system, and use chlorine dioxide, you must collect daily chlorite samples at the distribution entry point and monthly samples within distribution. Like chlorine

dioxide, exceeding the chlorite MCL at the distribution system entry point triggers a distribution system monitoring requirement on the following day (40 CFR 141.132(b)(2)).

Water utility customers such as hospitals, kidney dialysis centers, and customers with fish aquariums, can be especially sensitive to chlorine dioxide and its by-products. These customers should receive high priority notification if you make treatment changes or exceed threshold values.

6.7.3 Chloramines

Water systems in Washington do not use chloramines alone for primary disinfection. Chloramines are relatively weak disinfectants, so systems combine them with other disinfectants for primary disinfection—or use them for secondary disinfection. EPA developed CT tables for chloramines (USEPA, 1991). Like ozone and chlorine dioxide, the tables apply over a wide range pH, from 6 to 9. The daily inactivation ratio calculation is similar to that for free chlorine. Daily CT monitoring includes combined (total minus free) chlorine residual and temperature. Regulations require measurements at least once per day during peak hourly flow. Collect samples from the end of the contact pipe or basin and use the result in your daily CT calculations.

Water utility customers such as hospitals, kidney dialysis centers, and customers with fish aquariums, can be especially sensitive to chloramines. These customers should receive high priority notification if you make treatment changes.

6.7.4 UV

Ultraviolet radiation (UV) is a practical way to inactivate pathogens like *Giardia* and *Cryptosporidium*. Filtered and unfiltered systems can use UV for primary disinfection. UV reactor validation approved during the design review of your facility establishes operational conditions you must maintain to deliver the required minimum dose (flow, UV transmittance (UVT), and power settings).

Systems use one of two UV dose-monitoring strategies to control UV reactors and confirm that reactors provide the required dose within the validated range of operations. The sensor set point approach relies on a UV intensity set point established during validation testing. The calculated dose approach uses an equation to estimate UV dose based on operating conditions, including flow rate, UV intensity, and UVT. In Washington, most surface water treatment facilities use the calculated dose approach.

The MOR identifies specific parameters needed to monitor and confirm that the reactor operates within validated conditions. The MOR also documents quality assurance and quality control (QA/QC) procedures, such as calibration and verification of UVT analyzers and sensors. The table below shows typical monitoring and reporting parameters.

UV Disinfection Monitoring/Reporting Elements		
Parameter	**Monitoring Frequency**	**Reporting Requirement**
Flow	Continuous	Daily Maximum
Irradiance	Continuous	Minimum Daily Value. (Amount of time below minimum allowable levels if using sensor set point control.)
Dose	Continuous (For calculated dose control only.)	Minimum Daily Value if using calculated dose control. (Amount of time below minimum required dose.)
UV Transmittance (UVT)	Continuous (For calculated dose control. When using sensor set point control take a daily grab sample.)	Minimum Daily Value. UVT during minimum calculated dose. Weekly comparison to bench-top reading. Date of most recent calibration
Power	Continuous	Daily Lamp Status OK.
Lamp Operating Time	Continuous	Cumulative operation hours (note when lamp is changed).
Alarms	Continuous	Note high priority alarm conditions occurring during the month.
Cumulative Number of Off/On Cycles	Continuous	Monthly total.
Sensor Status	N/A	Monthly comparison of working and reference sensors. Note when system sensor calibrated by factory (min. annually).

6.8 Special Monitoring for Alternative Filtration Technologies

Alternative filtration technologies like membrane and bag filtration rely on pressure sensors, gauges, and water quality monitoring to verify that the filtration barrier is intact and operating within its design parameters. These devices indicate needed maintenance, such as back flushing, membrane cleaning, or disposable filter replacement. Just like any important equipment, pressure sensors and gauges require routine calibration and verification to ensure they work properly and meet the required accuracy.

6.8.1 Membrane Filtration

Because turbidity is not a good measure of membrane performance, operators of low-pressure membrane filters must monitor and report other parameters to demonstrate that the units work effectively. These parameters are in the MOR developed during your facility design review and include daily production (hours of operation, flux rate, and maximum transmembrane pressure) and results of direct integrity tests (minimum test pressure and maximum pressure decay

(psi/min)). These requirements are in addition to combined filter effluent turbidity measurements in the SWTR.

Direct integrity testing uses pressure decay testing (PDT) as the primary tool to ensure membrane filters operate properly. You must complete PDT at least once per day. There are specific PDT requirements for each membrane technology. Pressure sensor calibration is an essential part of quality assurance. Calibrate pressure sensors at least once per year, or more often if the manufacturer recommends it, to ensure they continue to meet the accuracy specified in the original design.

Indirect integrity testing uses particle counts or high-resolution turbidity (from laser turbidimeters) continuously measured from each filtration unit (skid, cell, or train). Systems must use indirect integrity testing to determine when they need to run PDTs more often than once per day. You must report the daily maximum value of the continuous readings (counts/mL or mNTU) on your MOR.

To calibrate and verify laser turbidimeters, follow procedures in Section 6.4.1. Particle counters require regular maintenance, including cleaning and annual or semiannual calibration. Follow your equipment manufacturer's recommendations.

6.8.2 Bag and Cartridge Filtration

Bag and cartridge filtration systems use pressure gauges to determine when filters need replacement. *Giardia* and *Cryptosporidium* filters have specific maximum differential pressure limits of 20 to 30 psi based on their alternative filtration technology approval. Make sure you measure pressure differentials at the right location as shown in the table below.

Measure pressure differential with a single differential pressure gauge or separate gauges on the inlet and outline lines. Check installed pressure gauges at least once per year to ensure they read accurately. Keep several spare gauges on hand, in case they need replacement. Quickly check a gauge by swapping it with a new gauge and comparing the two readings. They should match within the accuracy of the gauge, typically 2 to 3 percent of full scale.

Bag and Cartridge Filtration Pressure Differential Limits

Make/model	Configuration	Maximum Pressure Differential (psi)	How measured
Harmsco HC/170-LT2 (filter) MUNI-1-2FL-304 (housing)	Single filter housing, multiple cartridges	30	Absolute pressure drop across the filter
Rosedale PS-520-PPP0241 & GLR-PO-825-2 (filters) 8-30-2P (housing)	Dual housings	20	Absolute pressure drop across both filters
Strainrite HPM99_CC-2-SR & HPM99-CCX-2-SR (filters) AQ2-2 (housing)	Dual housings	25	Absolute pressure drop across both filters

7.0 Critical Alarms and Alarm Set Points

Critical alarms help ensure your disinfection and filtration processes are working, there is neither too much nor too little water in the clearwell, and you are not adding unsafe amounts of key water treatment chemicals. Focus on critical treatment processes, such as coagulation, filtration, and disinfection, where treatment failure poses an immediate risk to public health or safety.

Each treatment plant has a unique set of critical alarms. The most common are turbidity, chlorine residual, pH, and clearwell level. The alarm settings must allow a margin of safety so you have time to correct the problem or shut down the process before a regulatory or health limit is reached. Typical alarm setpoints are in Appendix A.12.

If your plant runs in unattended mode, critical alarms must trigger plant shutdown, in addition to dialing out to the on-call operator.

Alarms and the callout systems they activate must be tested regularly so they will function reliably when a problem occurs. For plants that run in unattended mode, alarms must be tested at least monthly. For plants staffed 24/7, alarms should be tested at least quarterly or at the same time as routine manufacturer-recommended instrument calibration. Alarms and callouts should always be tested following a power outage or after work is done on the system. Test even more often if equipment is older or the plant has a history of problems.

Test alarms by checking set points at the instrument or in SCADA, injecting test solutions or simulating a high reading. Allow the alarms to run long enough to perform callouts, and verify the callouts are received by the intended phone numbers. Consult the manufacturer for suggestions on the best way to test your equipment. For example,

- Alarm set points: Check the alarm settings at each on-line instrument. If you have a SCADA system, check the settings in the control program by checking each critical alarm against a master list from your written Operations Program.
- Chlorine residual: Shut off the flow in the sample line and inject an unchlorinated or over-chlorinated test solution. Restore normal flow to the instrument when finished.
- Turbidity: Pull the head of the turbidimeters to simulate a high reading. Lower the alarm set point to below the current reading until the alarm triggers. Restore the set point when complete.
- pH: Shut off the flow in the sample line and inject a high pH or low pH test solution. Restore normal flow to the instrument when finished.

If an alarm fails and allows inadequately treated water to enter the system, contact your regional office immediately to find out whether a health advisory or other follow-up is needed. Conduct an after-incident review, correct any deficiencies identified, and document lessons learned.

Review your plant's standard operating procedures as discussed in section 8.0 to make sure your customers are protected even when things go wrong. You can find more information on alarms and alarm set points in these references:

1. Reliability for Filtered Systems, WAC 246-290-678. apps.leg.wa.gov/wac/default.aspx?cite=246-290-678
2. AWWA Standard G100-11: Water Treatment Plant Operation and Management. awwa.org/store/productdetail.aspx?productid=6923
3. Recommended Standards for Water Works. Policies for reviewing and approving plans and specifications for public water supplies. health.state.mn.us/communities/environment/water/tenstates/standards

8.0 Standard Operating Procedures

Written standard operating procedures (SOPs) help ensure every operator at your facility follows consistent and correct procedures, your plant meets regulatory requirements, and your utility follows best industry practices. Don't make this hard. Your SOPs should be short and simple, while still covering what's important. This makes them easier to create, update, and maintain. Review them at least once per year and consider testing them whenever you train a new employee.

Critical SOPs for surface water treatment monitoring include procedures for measuring chlorine, pH, and turbidity; instrument settings for online turbidimeters; procedures for calculating inactivation ratio; and alarm setpoints and testing. Use the sample SOPs for measuring pH, chlorine residual, and turbidity in Appendix A.5 through A.8 as baseline documents, and tailor them to your plant and your needs.

9.0 Recordkeeping and Reporting

You must maintain accurate and complete records of your surface water treatment monitoring (WAC 246-290-639). You must record monitoring results on ODW-approved forms and submit them to us by the tenth day of the following month. Many of the more common forms are available at doh.wa.gov/odwpubs.

Follow record management best practices. Records must be legible, readily identifiable and retrievable. Avoid losing records to fire, flood, computer malfunction, or other disaster by maintaining duplicate copies. Store duplicate records in a secure, off-site location that's easily accessible in a timely manner. Automatic routine backups are best. Data log storage devices should have surge protection and uninterruptible power supplies to avoid data loss during a power surge or outage. Be sure to protect your data storage system against unauthorized access.

Regulations set minimum record retention requirements for your facility (WAC 246-290-480). You must keep source meter readings for at least ten years, turbidity data for at least five years, and most other plant monitoring and performance data for at least three years.

Many treatment plants have a single logbook with handwritten notes about any treatment plant activity. These logbooks are useful tools for operators, but probably aren't adequate for tracking and scheduling routine maintenance of specific equipment or instrumentation. We recommend keeping individual logbooks for each type of instrument, and recording all maintenance, calibration, verification, and repair information in that logbook. This can be a physical book or an electronic system, such as a database or spreadsheet, whatever works best for your utility.

10.0 Conclusions

Quality data you can trust depends on proper installation and maintenance of your equipment, robust calibration and verification procedures, and accurate reporting. Qualified and certified operators make it happen by building and sustaining a culture of excellence.

If you have questions about system-specific requirements for your utility or any of the information in this document, contact your regional office.

Eastern Regional Office 509-329-2100

Northwest Regional Office 253-395-6750

Southwest Regional Office 360-236-3030

Appendix

A.1 Sample SWTR Monitoring Plan (small slow sand plant)

A.2 Sample SWTR Monitoring Plan (rapid rate conventional plant)

A.3 Acceptable methods for measuring turbidity, temperature and pH

A.4 Acceptable methods for measuring residual disinfectant

A.5 Sample SOP: Measuring turbidity-Hach 2100Q Portable Turbidimeter (0-1000 NTU)

A.6 Sample SOP: Measuring free chlorine residual-Hach Pocket Colorimeter II (0.02 – 8 mg/L)

A.7 Sample SOP: Check of Chlorine Test Kit using Standard Additions-Pocket Colorimeter II

A.8 Sample SOP: Measuring pH using Hach SensION+ Portable Test Kit and 5050T probe

A.9 Recommended On-line Turbidimeter Settings and Monitoring Guidelines: Rapid Rate & Membrane Filtration Plants

A.10 Recommended On-line Turbidimeter Settings: Unfiltered sources and Slow Sand, DE, and Bag Filtration Systems

A.11 Plumbing Sample to a Process Analyzer—Thoughts to Ponder

A.12 Typical Alarm Set Points

A.1 Sample SWTR Monitoring Plan (Small Slow Sand Filter Plant)

Parameter	Procedure	Equipment
Filtration Process		
Fecal coliforms (raw)	Collect grab sample on first day of month from raw water sample tap installed before slow sand filters. Mark sample lab slip as "Surface or GWI Raw Source Water Sample", check box labeled "Fecal," Filtered "Yes," and record source ID "01." When you receive results from lab, record fecal coliform count on MOR summary page.	100 mL sample bottle (from the lab)
Turbidity (raw)	Collect grab sample each morning (daily) from raw water sample tap installed before slow sand filters. Record value on MOR.	Hach 2100Q portable turbidimeter
Turbidity filtered (IFE)	An on-line instrument is connected to the filter effluent pipe of each slow sand filter. Every morning, record displayed value from each instrument on the MOR.	Hach 1720E/SC200
Turbidity filtered (CFE)	An on-line instrument is connected to the combined filter effluent pipe prior to the clearwell. Every morning record the value displayed on the instrument on the MOR.	Hach 1720E/SC200
Disinfection: Inactivation Ratio Determination		
Disinfection Sequence 1. Pipeline from treatment plant to storage tank. Assumed 1.0 baffling factor.		
Temperature (°C)	Collect sample each morning from Ranger House kitchen sink (first service) and immediately measure temperature.	Fischer Scientific digital traceable thermometer
pH	Collect sample each morning from Ranger House kitchen sink and immediately measure pH.	Hach SensION portable with 5050T probe
Free Chlorine Residual (mg/L)	Collect sample each morning from Ranger House kitchen sink and quickly measure free chlorine residual.	Hach Pocket Colorimeter II
Peak hourly flow, PHF (gpm)	PHF is controlled by transfer pump rate from treatment plant to the 8,900-gallon storage reservoir. Use constant rate of 3 gpm. Verify flow every year using tank drawdown test.	
Contact Time (min)	Contact volume based on 15 LF of 12-inch diameter pipe, followed by 290 LF of 2-inch diameter pipe (134 gallons total) T=V/PHF=134÷3=44. Use constant 44-minute time.	
Disinfection Sequence 2. Unbaffled 8,900-gallon storage tank with separate inlet and outlet. Empirical 0.1 baffling factor. Dimensions: 13 ft inside diameter, 9 ft maximum depth (pump-off setting).		
Temperature, pH & free chlorine residual	Use same monitoring point for both sequences (see above)	See above
Peak hourly flow, PHF (gpm)	PHF is maximum one-hour flow leaving reservoir, expressed in gallons per minute. Data logger captures hourly values from flow meter on reservoir discharge. Every morning, record PHF for previous day.	Badger 2-inch positive displacement meter with data logger.
Reservoir depth, feet	Record level each morning before plant start up	External sight gauge
Contact Time (min)	Daily calculation. Contact volume is based on recorded daily water depth measurement, D, in feet. V=994 gal/ft x D. T=0.1 x V/PHF	
Entry Point and Distribution Residual		
Free Chlorine Residual (mg/L)	(Entry point) Use same location as chlorine residual for CT. Population is <500 people, one grab sample per day is required	Hach Pocket Colorimeter II
Free Chlorine Residual (mg/L)	(Distribution) Collect a grab sample each morning from campground, rotating among listed sites in coliform monitoring plan. Also, measure whenever collecting a routine or repeat coliform sample.	Hach Pocket Colorimeter II

A.2 Sample SWTR Monitoring Plan (Rapid Rate Conventional Plant)

Parameter	Process	Equipment
Filtration Process		
Turbidity (raw)	Collect grab sample each morning (daily) from raw water tap, just inside plant, prior to chemical injection. Record values on MOR.	Hach 2100N
Turbidity (settled)	An online instrument is connected to settled water effluent line. Values sent to SCADA. Record average daily value on MOR.	Microtol 3/02055
Turbidity filtered (IFE)	An online instrument is connected to effluent pipe from each filter. SCADA historian records value every 15 minutes of operation	Microtol 3/02055
Turbidity filtered (CFE)	An online instrument is connected to combined filter effluent pipe prior to clearwell via sample pump. Using SCADA trend, report values 15 minutes after plant startup and subsequent readings every 4 hours on MOR. Report absolute max. for day from SCADA trend chart.	Microtol 3/02055
Disinfection: Inactivation Ratio Determination		
One disinfection sequence: 100,000 gallon baffled reservoir. 0.35 baffling factor from 2016 tracer study. Dimensions: 29 ft inside diameter, 17 ft maximum depth (overflow).		
Temperature (ºC)	Collect grab sample twice daily from tap on discharge side of high service pump (clearwell effluent). Report min. of two values on MOR.	Fischer Scientific digital traceable thermometer
pH	Collect grab sample two times daily from tap on discharge side of high service pump (clearwell effluent). Report max. of two values on MOR.	Hach HQ 30D
Free chlorine residual (mg/L)	Measured continuously from sample tap on discharge side of high service pump (clearwell effluent). Report daily min. value from SCADA trend on MOR.	Cl-17 (continuous), DR890 (grab)
Peak hourly flow, PHF (gpm)	Measured continuously by flowmeter on tank effluent line. Values sent to SCADA every minute. SCADA calculates max. one-hour flow leaving reservoir each day, expressed in gallons per minute. Record on MOR.	Allen Bradley magmeter, recorded to SCADA
Tank Depth (ft)	Measured continuously, values sent to SCADA every minute. Record lowest daily level from SCADA on MOR.	Pressure transducer, recorded to SCADA
Contact Time (min)	Calculate daily. Contact volume based on recorded daily water depth measurement, D, in feet. V=4900 gal/ft x D. T=0.35 x V/PHF	
Entry Point and Distribution Residual		
Free chlorine residual (mg/L)	(Entry point) Measured continuously. Use same location as chlorine residual for CT. Report min. daily value on MOR.	Cl-17 (continuous), DR890 (grab)
Free chlorine residual (mg/L)	(Distribution) Collect at least one grab sample every day rotating among sites in coliform monitoring plan. Also, measure whenever collecting routine or repeat coliform sample.	DR890

A.3 Acceptable Methods for Measuring pH, Temperature, and Turbidity

Parameter	Minimum Accuracy	Acceptable Methods[a]	Examples of Commercial Test Kits or Equipment[b]
pH[c]	+/- 0.05 pH unit *(report to the nearest 0.1 unit)*	Electrometric (SM 4500-H+) (EPA 150.3)	Fisher Scientific Accument AB15 Hach HQd series, sensION series Hanna HI99192, HI5221 LaMotte pHPlus Oakton EcoTestr pH2 Oakton pH6+ Orion 3-Star
Temperature	+/- 0.5°C *(report to the nearest 1°C)*	Thermometric (SM 2550)	Any liquid-filled glass or digital thermometer that can distinguish 0.1° C increments
Turbidity[d]	+/- 0.05 NTU *(report to the nearest 0.05 NTU, 0.01 NTU for rapid rate and membrane plants)*	Any approved method under 40 CFR 141.74(a)(1) or alternative testing methods under Appendix A to Subpart C of 40 CFR 141	Hach 2100N, 2100AN, 2100Q HF Scientific Micro 1000 Hach 1720D or E (online) HF Scientific MicroTol 3(online)
			GLI Accu4 (online) Hach FilterTrak 660 (online) Hach TU5 Series Lovibond PVT1000 Swan AMI Turbiwell

[a]SM means Standard Methods for the Examination of Water and Wastewater, 22nd edition.
[b]This is not a complete list of all available equipment nor an endorsement of any specific product.
[c]For low ionic strength water (conductivity < 100 uS/cm^2) consider using a specialized probe.
[d]For membrane indirect integrity monitoring, in lieu of particle counting, must use a high-resolution laser turbidimeter such as the Hach FilterTrak 660, Hach TU5400 or the Lovibond PVT6000, with a lower limit of detection of no more than 0.0003 NTU.

A.4 Acceptable Methods for Measuring Residual Disinfectant

Parameter	Minimum Accuracy	Acceptable Methods[a]	Examples of Commercial Test Kits or Equipment[b,c]
Free chlorine[d]	+/- 0.1 mg/L *(report to the nearest 0.1 mg/L)*	Amperometric titration (SM 4500 Cl-D)	
		DPD-ferrous titration (SM 4500 Cl-F)	
		DPD-colorimetric (SM 4500 Cl-G)	Hach Pocket Colorimeter II Hach DR 890/900 LaMotte DC-1500CL LaMotte SMART Colorimeter Hach Cl-17 (online)
		Syringaldizine (FACTS) (SM 4500 Cl-H)	
		EPA 334.0	Any online analyzer
Combined chlorine[d] (chloramines)	+/- 0.1 mg\/L	Amperometric titration (SM 4500 Cl-D and 4500 Cl-E)	
		DPD-ferrous titration (SM 4500 Cl-F)	
		DPD-colorimetric (SM 4500 Cl-G)	Hach Pocket Colorimeter II Hach DR890/900 Hach Cl-17 (online)
		Iodometric electrode (SM 4500 Cl-I)	
		EPA 334.0	Any online analyzer
Chlorine dioxide	+/- 0.05 mg/L	DPD Method (SM 4500-$Cl0_2$D)	Hach DR900, DR1900
		Amperometric titration (SM 4500-$Cl0_2$ C, 4500-$Cl0_2$ E)	
		Spectrophotometric (EPA 327.0)	
		Amperometric sensor	ChloridoX Plus
Ozone	+/- 0.02 mg/L	Indigo method (SM 4500-O_3B)	Hach DR900, DR1900 Hach Pocket Colorimeter-ozone

[a] SM means Standard Methods for the Examination of Water and Wastewater, 22nd edition.
[b] This is not a complete list of all available equipment nor an endorsement of any specific product
[c] Color comparator test kits, such as color wheels & test strips are not acceptable for SWTR monitoring
[d] Total chlorine minus free chlorine

A.5 Sample SOP: Measuring Turbidity—Hach 2100Q Portable Turbidimeter (0–1000 NTU)

Method Summary, Instructions, Interferences and Tips

Turbidity is a measurement of scattered light from suspended solids: the higher the intensity of scattered light, the higher the turbidity.

The HACH 2100Q measures turbidity in nephelometric turbidity units (NTU) using a nephelometric method that relies on passing specific light at a specific wavelength through the sample.

- Fine air bubbles can cause high readings. To reduce, allow the sample to sit for a few minutes to allow bubbles to dissipate or use a syringe to apply a vacuum for 10 seconds.
- Floating debris and coarse sediments, which settle out rapidly, will give low readings. If measuring raw or settled water with higher turbidity, mix the sample to disperse the solids thoroughly. Wait until air bubbles disappear then gently agitate the sample to resuspend any heavier particles without introducing air bubbles.
- Condensation on the outer surface of sample cuvettes can cause erratic readings. Remove condensation by coating the outside of the cuvette with a small amount of silicon oil and wiping thoroughly with a fresh lab wipe. In cold weather, it may be necessary to move the turbidimeter indoors to measure sample turbidity; allow samples to come to room temperature before analysis.
- The presence of true color will cause readings to be low. True color is due to dissolved substances that absorb light. Light absorbing materials, such as activated carbon in significant concentrations, can cause low readings.
- Replace sample cuvettes when they become scratched or etched. You may use a light coating of silicon oil to mask minor imperfections. Wipe thoroughly with a fresh lab wipe before reading the sample.
- For improved accuracy, index each sample cuvette by filling it with deionized water, inserting it into the turbidimeter, and rotating the cuvette to find the orientation that produces the lowest turbidity reading. Mark the cuvette where it aligns with the raised orientation mark on the optical well of the turbidimeter. When measuring the turbidity of a sample, align the mark on the cuvette with the raised orientation mark on the meter.
- Replace calibration and verification standards before they reach the expiration date on the label.

Calibration

Calibrate HACH 2100Q meter at least every three months and whenever verification does not pass. Use sealed StablCal formazin solutions and follow directions on page 10 of *HACH 2100Q Basic User Manual*.

Use extreme care when handling Reference Standards and handle them by the top only. **Surface scratches or finger smudges cause analysis errors.**

Measuring a Sample

1. Turn on meter. Invert 10 NTU Reference Standard several times until it is well mixed and place it into optical well with orientation mark aligned with raised orientation mark in front of cell compartment (see page 10 of *HACH 2100Q Basic User Manual*). Press "verify cal" and then "Read." If the meter displays "Calibration Verification Passed," meter is ready for use. If not, recalibrate meter.

2. Start with a clean, indexed sample cuvette. Rinse it three times with sample water then fill to within about ½-inch of the top with a sample directly from the sample tap. Place cap on sample cuvette and carefully wipe any condensation from outside of the cuvette with a lint free lab wipe. Place sample cuvette into well, align index mark with raised orientation mark on optical well, and press "Read." Read NTU reading directly from the display. Record value to nearest recommended NTU (see table below) on your field data sheet.

3. Rinse sample cuvette three times with deionized water to get it ready for the next sample.

4. Fill recently cleaned cuvettes with deionized water and store them in a manner to avoid contamination of the inside with particles or scratches and abrasions to the outside surface.

5. Report results as follows.

NTU Reading	Record to Nearest
0.0–1.0	0.05*
1–10	0.1
10–40	1
40–100	5
100–400	10
400–1000	50
>1000	100

**Rapid rate and membrane plants report to nearest 0.01.*

References

HACH. 2013. HACH 2100Q and 2100Qis Basic User Manual. HACH, Inc. Loveland, CO.
U.S. Environmental Protection Agency. 1993. Determination of Turbidity by Nephelometry. Method 180.1. Environmental Monitoring and Support Laboratory, Cincinnati, OH.
U.S. Geological Survey. 1998. National Field Manual for the Collection of Water Quality Data. Book 9, Handbooks for Water-Resource Investigations. United States Geological Survey. Reston, VA

Revision date: April 25, 2019.

A.6 Sample SOP: Measuring Free Chlorine Residual—Hach Pocket Colorimeter II (0.02-8 mg/L)

General instructions	Revision date: April 25, 2019.
♦ Once per quarter, use standard additions to validate test procedure, reagents and instrument (see separate SOP). ♦ Once per week, measure SpecCheck® secondary standards (make sure not expired). ♦ Use **separate** sample cells for free and total chlorine; caps are labeled "free" and "total." ♦ Use **same** sample cell for zeroing the instrument and taking a measurement. For distribution samples, flush 5 minutes or as needed to get a sample from water main.	
Low range (0.02 to 2 mg/L)	
1. Turn on instrument and confirm it is in low range mode (LR)[a].	
2. Rinse sample cell and cap at least 3 times with water you will sample.	
3. Fill sample cell to 10 mL line and replace cap. (Bottom of meniscus just above or touching the line).	
4. Gently wipe cell clean and dry with a lab wipe.	
5. Place sample cell in instrument with diamond facing instrument keypad.	
6. Close cover securely, press blue "zero" button and wait for display to read 0.0.	
7. Add contents of one 10 mL free chlorine residual reagent packet.	
8. Replace cap and swirl for 20 seconds.	
9. Wipe cell dry with a lab wipe.	
10. Immediately[b] insert cell into instrument with diamond facing keyboard.	
11. Close instrument cover securely and press green "read" button.	
12. **Important**! **Rinse sample cell thoroughly after use and allow it to air dry if possible.**	
High range (0.1-8 mg/L)[c]	
1. Use plastic high-range sample cell.	
2. Turn on the instrument and confirm it is in the high range mode (HR)[a].	
3. Rinse sample cell and cap at least 3 times with water you will sample.	
4. Fill sample cell to the 5 mL line and replace the cap. (Bottom of meniscus just above or touching the line).	
5. Wipe cell clean and dry with a lab wipe.	
6. Place cell in instrument with diamond facing the instrument keypad.	
7. Close cover securely, press "zero" button and wait for display to read 0.0.	
8. Add contents of **two** 10 mL free chlorine residual reagent packets.	
9. Replace cap and swirl for 20 seconds.	
10. Immediately[b] insert cell into the instrument with diamond facing the keyboard.	
11. Close cover securely and press green "read" button.	
12. **Important**! **When done testing, rinse sample cell thoroughly and allow it to air dry, if possible.**	
[a]*To switch between high range (HR) and low range (LR), press menu button, then blue zero button until display reads SEL. Press green button to toggle between LR and HR. Press menu button again to exit.*	
[b]*Caution! Time from adding the reagent to reading the result must not exceed 1 minute.*	
[c]*If chlorine concentration is typically less than 2 mg/L, use low range procedure.*	
	Revision date: April 25, 2019.

A.7 Sample SOP: Check of Chlorine Test Kit Using Standard Additions-Pocket Colorimeter II

Purpose: Evaluate your chlorine testing equipment and techniques to verify testing accuracy and precision.

Equipment and supplies: Hach Pocket Colorimeter II® with 10 mL sample cuvette, chlorine standard solution (25-30 mg/L, 2 mL ampules), ampule breaker, small Tensette® pipet (0.1-1.0 mL) and disposable tips, large Tensette® pipet (1-10 mL) and disposable tips, free or total chlorine reagent, SpecCheck® secondary standard.

Procedure

1. Rinse cuvette with deionized water 4–5 times. Shake with the cap on.
2. Shake out all the water.
3. Measure 10 mL deionized water with the large pipet[1] and dispense it into the cuvette.
4. Add a powder pillow (either total or free), swirl to mix. Wipe the outside of the cuvette with a lab wipe.
5. Insert the cuvette into the instrument. Orient the cell alignment mark facing towards the keypad.
6. Zero the instrument. This corrects for color and turbidity of sample and reagent.
7. Get the small pipet[1] ready. Measure 0.1 mL of the standard. Waste the first dose.
8. Dispense the standard into the cuvette, swirl to mix.
9. Read the sample and record the results in the data table below.
10. Repeat steps 7–9 at least four times.
11. Calculate percent recovery of the test samples and compare to the concentration you expected (see data table below).

[1]Pipet Tips (Tensette® pipet)

- Make sure the tip is on snugly.
- Use the alignment mark.
- Push the plunger down before putting the tip in the liquid.
- Once in the liquid, raise your thumb slowly.
- Before dispensing the liquid, click to the next highest number (for max value use "F") (Note: some pipette brands have two stops. If your pipette has two stops, skip this step).
- Dispense "with gusto," keeping the tip of the pipette above the liquid.

Troubleshooting tips if results show greater than 10 percent variance.

- Try a reagent with a different lot number.
- Clean the vial or try a new vial.
- Verify that the primary standard is not expired.
- Verify the calculation for expected concentration and percent recovery.
- Have another individual go through the procedure with the same equipment.
- Verify the volume the pipette delivered. The density of water is 1 gram/mL. You can test the volume delivered by weighing it with a laboratory scale.

Ref: Hach Method 8021, Free Chlorine, Doc316.53.01023

Revision date: April 25, 2019.

Example Standard Additions Data Table

Test kit Make/Model		**Hach Pocket Colorimeter II**		**Serial Number**	**0E26279**
Manufacturer's estimated detection limit, mg/L		0.02		Analyst/User	BC
Chlorine standard concentration, Cs, mg/L		25.6		Date	6/12/2017

Sample #	**Sample vol (mL)**	**Expected Concentration, C′**	**Measured Values (mg/L)**	**% Recovery**	**Notes**
blank	10.0	0.00			Original sample, C_0
1	10.1	0.253	0.26	103	Added 0.1 ml solution
2	10.2	0.502	0.50	100	Added 0.1 ml solution
3	10.3	0.746	0.75	101	Added 0.1 ml solution
4	10.4	0.985	0.97	99	Added 0.1 ml solution
				o.k.	Acceptable performance, 100 +/-10%

$C_1V_1=C_2V_2$: C′ = Cs(mL std added)/(10+(0.1)(# of additions))
% Recovery = (Measured Value/C′) x 100

A.8 Sample SOP: Measuring pH Using Hach SensION+ Portable Test Kit and 5050T Probe

General instructions

- Calibrate instrument using pH 4, 7 and 10 buffers each day you use it. Follow instructions in case. Record slope and offset, and confirm they are within acceptable limits.

  slope=-59.14 (+/- 5%); offset=0 +/- 30 mV
- Refrigerate buffers and replace before expiration date. Before using, allow buffers to warm up to temperature of water to be tested.
- Verify instrument using a pH 6.85 or 8 buffer before each set of readings.
- Sample from a smooth, pencil-sized stream, taking care not to aerate sample.
- Air bubbles trapped under the probe tip cause errors. If present, gently shake the probe until bubbles are removed.
- Store probe in KCl solution when finished sampling for the day. For storage, orient case so probe tip is pointing down (tip immersed in storage solution).

Calibrate the meter	
1.	Fill each labeled buffer tube with appropriate pH buffer. Fill DI bottle.
2.	Remove probe from storage solution and rinse with DI water. Blot dry with lab wipe, making sure to dab the tip of the electrode carefully.
3.	Place electrode in the pH 4 buffer. Turn on unit.
4.	Press [••• button to make sure meter is set to pH mode. Press [••• again to accept parameter and press a third time to read buffer. Wait until screen indicates meter is ready for next pH buffer.
5.	Rinse pH probe with DI water in between buffers and dab with lab wipe.
6.	Repeat with pH 7 and 10 buffers.
7.	Perform a verification check with another buffer (pH 6.85 or 8).
8.	Empty the pH buffer tubes at the end of each day.

Taking a reading	
1.	Rinse probe with DI water. Blot dry with lab wipe.
2.	If not already done, verify calibration using a fresh pH 6.85 or 8 buffer (single point). If not within +/-0.2 units of true value, recalibrate.
3.	Allow probe to sit in sample water for five minutes.
4.	Collect fresh sample and insert probe.
5.	While gently swirling, press read button and allow reading to stabilize.
6.	Record pH, temperature, and time of measurement.
7.	Wait several seconds and press read again. Ideally, pH and temperature will stay the same (+/- 0.05 units).

Revision date: April 25, 2019

A.9 Recommended On-line Turbidimeter Settings and Monitoring Guidelines: Rapid Rate and Membrane Filtration

Turbidimeter Setting or Activity	Recommendation	Comments
Sample Flow Rate	Measure at least monthly. Meet the manufacturer's specifications.	For the 1720E, a flow rate of 500 ml/min appears to be a good starting point (Hach specifies 200 to 750 ml/min). Higher flow rates will provide a quicker response time, but may cause problems with air bubbles in cold temperatures. For TU5 models manufacturer recommends flow rate of 200 mL/min when the maximum particle size is 20 µm. For larger particles (150 µm maximum), increase flow rate to 350 to 500 mL/min.
Error Hold Mode	The output should be set to "Transfer" mode with a transfer setting of 0.0 NTU.	When a controller loses communication with its sensor, it either holds the output at the last good reading or transfers to a predefined value. (The Hach SC controller default setting is HOLD.) The HOLD mode makes it more difficult to detect a communication anomaly because it holds the last measurement. When the TRANSFER mode is active, the controller will report a turbidity of 0.0 NTU, which would prompt the operator to investigate further.
Signal Averaging	30 seconds	The purpose of this setting is to achieve a stable turbidity reading for identifying trends. Too short of a setting may not provide a stable reading if the instrument becomes too sensitive to individual particles. A longer period will result in slower response times and may miss turbidity spikes.
Bulb Replacement	At least annually or as the manufacturer recommends.	For units with incandescent bulbs. Failing bulbs can cause the turbidimeter to lose its quarterly calibration.
Signal Span (Minimum and Maximum) Data Capping	0–5 NTU for finished water.	These settings do not affect the turbidity value displayed locally on a Hach turbidimeter or controller, but they will cap the data sent to the SCADA system or to an attached recorder. For example, using a 4–20 mA signal, if 20 mA equates to 1.0 NTU, then the controller will not send any turbidity value over 1.0 NTU to SCADA. The signal span maximum value must be set above the regulatory limit for that monitoring location. The CFE turbidimeter must be able to measure and record turbidities **exceeding** 1.0 NTU and IFE turbidimeters must be able to measure and record turbidities **exceeding** 2.0 NTU.
SCADA/Data recorder	Required. Must match the turbidimeter reading.	The data recorder/SCADA must be scaled to match the turbidimeter signal span.
Bubble Reject	On	Bubbles are "noise" and will cause turbidity spikes.
Sensor Datalog Interval (If No SCADA or Recorder)	1 or 5 minutes (1 min is preferred unless data storage or processing limitations exist).	If set to 15 minutes, this will store about 6 months of data, and can be a backup to your primary recording system.
Cleaning Interval (TU5 models)	12 hours (default)	For units equipped with automatic cleaning module (recommended). Adjust this based on water quality and plant experience. Daily cleaning may be sufficient for high quality filtered water.

A.10 Recommended On-Line Turbidimeter Settings Unfiltered Sources and Slow Sand, DE and Bag Filtration Plants

Turbidimeter Setting or Activity	Recommendation	Comments
Sample Flow Rate	Measure at least monthly. Meet the manufacturer's specifications.	For the 1720E, a flow rate of 500 ml/min is a good starting point (Hach specifies 200 to 750 ml/min). Higher flow rates provide a quicker response time but may cause problems with air bubbles in cold temperatures. For TU5 models manufacturer recommends flow rate of 200 mL/min when the maximum particle size is 20 µm. For larger particles (150 µm maximum), increase flow rate to 350 to 500 mL/min.
Error Hold Mode	You should set the output to "Transfer" mode with a transfer setting of 0.0 NTU.	When a controller loses communication with its sensor, it either holds the output at the last good reading or transfers to a predefined value. (The Hach SC controller default setting is HOLD.) The HOLD mode makes it more difficult to detect a communication anomaly because it holds the last measurement. When the TRANSFER mode is active, the controller will report a turbidity of 0.0 NTU, which would prompt the operator to investigate.
Signal Averaging	30 seconds	The purpose of this setting is to achieve a stable turbidity reading for identifying trends. Too short a setting may not provide a stable reading if the instrument becomes too sensitive to individual particles. A longer time will result in slower response times and may miss turbidity spikes.
Bulb Replacement	At least annually or as the manufacturer recommends.	For units with incandescent bulbs. Failing bulbs can cause the turbidimeter to lose its quarterly calibration.
Signal Span (Minimum And Maximum) Data Capping	0–10 NTU for finished water.	These settings do not affect the turbidity value displayed locally on a Hach turbidimeter or controller, but they will cap the data sent to the SCADA system or to an attached recorder. For example, using a 4–20 mA signal, if 20 mA equates to 1.0 NTU, the controller will not send any turbidity value over 1.0 NTU to SCADA. The signal span maximum value must be set above the regulatory limit for that monitoring location. The CFE turbidimeter must be able to measure and record turbidities **over** 5.0 NTU
Data Recorder or SCADA	Required. Must match turbidimeter reading.	The data recorder or SCADA must be scaled to match the turbidimeter signal span.
Bubble Reject	On	Bubbles are "noise" and will cause turbidity spikes.
Sensor Datalog Interval (If No SCADA or Recorder)	1 or 5 minutes (1 min is preferred unless data storage or processing limitations exist).	If set to 15 minutes, this will store about 6 months of data, and can be a backup to your primary recording system
Cleaning Interval (TU5 models)	12 hour (default)	For units equipped with automatic cleaning module (recommended). Adjust this based on water quality & plant experience. Daily cleaning may be sufficient for high quality filtered water.

A.11 Plumbing Sample to a Process Analyzer—Thoughts to Ponder

Terry Engelhardt, Application Development Manager—Drinking Water, Hach Company

Location, Location, Location—If The Sample Is Not Right The Analysis Is Not Right!

1. Is the sample well mixed and representative?
   a. Any chemical addition which can affect the measurement should be added far enough ahead of the sample point that it is well mixed and in solution. For example, if pH is to be measured after lime is added for pH adjustment, the measurement needs to be made far enough downstream that all the lime is in solution.
   b. If a chemical addition will interfere with measurement of the parameter of interest, the sample should be drawn before the point of chemical addition. For example, suspended lime particles can cause positive error in particle count measurements following filtration. Measure particle counts in filter effluent prior to lime addition.
2. Where possible avoid turbulent flow conditions—i.e., sample locations near valves, ells, tees, flanges. Turbulent flow conditions may dislodge scale, introduce severe entrained air and cause other sample anomalies, which will lead to inaccurate measurement.

Keep It Short, Keep It Simple, And Don't Delay

1. The instrument should be located as close as is practical to the sample location. If the sample to be measured is in the pipe gallery, then the instrument should be there too! Avoid piping sample long distances. Exceptions to the 'keep it short' rule include—
   a. Do not mount instruments in locations where the environment will be hostile to the function and life of the instrument, i.e. areas with corrosive gases or strong electromagnetic fields.
   b. Do not mount instruments in locations that are hazardous or difficult to access for operations and maintenance personnel. All instruments require periodic maintenance. If instruments are difficult or hazardous to access to perform required maintenance, they won't be maintained and they won't work!
2. Use sample lines that are corrosion resistant, small diameter and maintain high sample velocity
   a. Where possible use opaque, black plastic or metallic pipe/tubing compatible with the sample to be measured. The sample line must be opaque to block all light thus discouraging biofilm.
   b. Use the smallest diameter tubing that will deliver adequate volume and maintain high velocity.
      i. Select small diameter sample line to minimize the volume contained in the sample line and to maintain a high velocity.
      ii. Maintaining high velocity in the tubing will discourage accumulation of biofilm and solids, which will affect accuracy.
   c. Don't delay—Keep it short, keep it simple, maintain high velocity. See "Sample Delay" table.

Do Not Mix and Match Plumbing Fittings!

1. Do not come off a steel pipe with a galvanized nipple, connected to a brass valve, which will then connect to a copper sample line before getting to the analyzer. This is all too common and creates a galvanic corrosion cell at every point of contact between dissimilar metals.
2. Get to corrosion resistant materials as quickly as possible with minimal changes in the composition of materials of the plumbing fittings. Preferably, install corrosion-resistant metal or plastic materials.

Go With the Flow—Every Place for a Valve and Every Valve in its Place

1. Controlling flow and pressure is important for all measurements, critical for others. Instruments such as amperometric chlorine analyzers, particle counters and turbidimeters are very sensitive to changes in flow and pressure
2. Valves—so many choices. Ball valves, needle valves, gate valves, globe valves

Sample Delay in minutes per Foot of Sample Line (neglecting friction loss which will further increase the delay)																	
Sample Flow Rate, ml/min	Sample Flow Rate, gal/min	Copper Tubing (Nominal size, ID)						Sch 40 PVC (Nominal size, ID)									
		1/4",	0.315	3/8",	0.43	1/2",	0.545	1/4",	0.364	3/8",	0.493	1/2",	0.602				
300	0.08	0.051		0.095		0.153		0.068		0.125		0.186					
500	0.13	0.031		0.057		0.092		0.041		0.075		0.112					
750	0.20	0.020		0.038		0.061		0.027		0.050		0.075					
1000	0.26	0.015		0.029		0.046		0.020		0.038		0.056					
1500	0.40	0.010		0.019		0.031		0.014		0.025		0.037					
2000	0.53	0.008		0.014		0.023		0.010		0.019		0.028					
3785	1.00	0.004		0.008		0.012		0.005		0.010		0.015					
		Sch 80 PVC (Nominal size, ID)						Tygon Tubing (Nominal size, ID)									
		1/4"		3/8"		1/2",	0.562	1/4",	0.125	3/8",	0.25	1/2",	0.375				
300	0.08	NA		NA		0.162		0.008		0.032		0.072					
500	0.13	NA		NA		0.097		0.005		0.019		0.043					
750	0.20	NA		NA		0.065		0.003		0.013		0.029					
1000	0.26	NA		NA		0.049		0.002		0.010		0.022					
1500	0.40	NA		NA		0.032		0.002		0.006		0.014					
2000	0.53	NA		NA		0.024		0.001		0.005		0.011					
3785	1.00	NA		NA		0.013		0.001		0.003		0.006					

   a. Needle valves—avoid. Needle valves typically are incorporated with rotameters. Seems simple, measure flow and control flow all in one. Just say no!
      i. Use a rotameter to measure flow if you wish. They are simple, easy to install and provide sufficient accuracy.
      ii. Do not use rotameters with integral needle valves for flow control. Needle valves create air bubbles and easily become fouled with solids carried in the sample stream and corrosion products that may slough off of plumbing fittings.

   b. Ball and gate valves are commonly used to throttle (control) flow but they are not designed for flow control. Use ball and gate valves for on/off control. Ball valves are convenient in that they are normally ¼ turn from closed to fully open making operation fast and easy.

   c. Globe valves are designed to control flow. Use globe valves to control flow to instruments.

Keep it right down the middle

1. Avoid sampling from the top or bottom of a pipe. Sampling from the top will often result in problems with air in the sample. Sampling from the bottom will be non-representative due to solids, which will inevitably accumulate at the bottom of the pipe.
2. Typically it is best to sample from the side of a pipe ± 45°.
3. It is desirable to sample from the middle of the pipe rather than from the edge, especially on larger diameter pipe (say, 6″ diameter or larger). Samples drawn from the edge of a pipe can be non-representative due to fouling from sediment/biofilm accumulated on the wall of the pipe.
4. Sample probes or sample quills are available from a number of manufacturers. Some of these are fixed in place, others are retractable. The probes/quills are available in a variety of materials. The probe pictured at right is retractable. And, it has multiple ports so the sample is a cross section of the pipe rather than one point; a feature may be desirable in some instances, especially larger diameter pipes.

Pump It Up—Or Not

1. Avoid pumping sample where possible. Pumping can change the sample by entraining air, changing sample temperature (thus changing solubility of some substances) contributing corrosion products and/or changing the nature (i.e. size or shape) of suspended material.
2. When pumping is unavoidable:
   a. Avoid pumps which cause pulsation (diaphragm, piston, and peristaltic pumps). Pulsations can cause measurement irregularity. If unavoidable, use a pulse dampener after the pump.
   b. Centrifugal pumps are typically preferred to positive displacement pumps for providing samples to analyzers due to lower cost and centrifugal pumps are easier to throttle (control flow and pressure).
   c. Select a pump with components compatible with the sample. A pump with all composite (nonmetallic) wetted parts is desirable. Pumps with metallic wetted parts can create measurement errors by introducing corrosion products.
   d. Avoid excessive suction lift. At sea level, an ideal pump has a maximum lift of about 34 feet. Considering pump efficiencies, and other factors, even at sea level, the **practical suction lift** is only about 25ft. At a mile above sea level (Denver, Colorado) the practical lift of only about 21 feet. Pump manufacturers will typically specify the maximum lift for their pump. Operating a pump near suction lift design limits will cause cavitation and other problems. The suction side of a centrifugal pump should not be restricted—the valve on the suction side should always be fully open. Where suction lift is too great, one should consider a submersible pump.

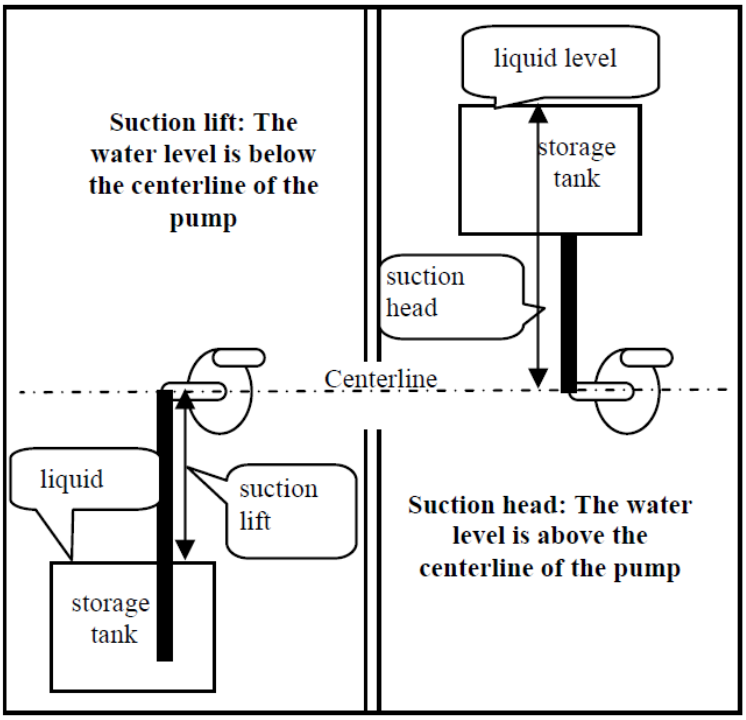

When good sampling practices are not followed, don't blame inaccurate measurement on the instrument! If the sample is not right the analysis is not right!

A.12 Typical Alarm Set Points

Type of Plant/Parameter	High/Low	Purpose	Typical Set Points
All Plants			
Chlorine Residual	Low-low (shutdown)	Keep inadequately disinfected water from entering the distribution system.	Treatment plant specific. As needed to maintain IR above 1.0 and chlorine at entry above 0.2 mg/L. Likely be 0.2 to 0.6 mg/L.
	High-high (shutdown)	Avoid exceeding the maximum residual disinfectant level (MRDL).	Can be set as high as 4.0 mg/L, but should be lower.
pH	Low-low (shutdown)	Detect an overfeed. Used only if an acid is fed.	pH of 5.5 to 6.0 could be used in most situations.
	High-high (shutdown)	Prevent high pH water from entering the distribution system. Used only if strong base is fed.	pH 9.0 to 9.5 could be used in most situations.
Clearwell Level	Low	Avoid inadequately disinfected water (IR<1.0) from entering the distribution system.	Unique for each system. As needed to maintain IR above 1.0.
	High-high (shutdown)	Prevent an overflow that could damage the plant.	Unique for each system.
Rapid Rate Filtration			
Turbidity (combined filter effluent)	High	Alert the operator of a significant process change so corrective action can be taken.	0.10 NTU or slightly less.
	High-high (shutdown)	Avoid a treatment technique violation.	Slightly less than 0.30 NTU.
Turbidity (individual filter effluent)	High	Maintain optimized performance. End the filter run on turbidity breakthrough.	0.10 NTU or slightly less

Membrane Filtration			
Pressure decay test (psi/min)	High	Ensure the membranes are intact and providing effective treatment	Use direct integrity upper limit from alternative technology memo.
Turbidity (combined filter effluent)	High	Avoid a treatment technique violation.	Less than 0.10 NTU.
Turbidity or particle counts (individual filter effluent)	High	Trigger a direct integrity test.	Use indirect integrity control limits from alternative technology memo.
Other filtration technologies			
Pressure differential (bag filtration)	High	Ensure the bags are not operated outside their approved design.	Use maximum pressure differential from alternative technology memo.
Filter flow rate (DE)	Low	Maintain integrity of the DE filter cake.	Unique for each system.
Raw water turbidity (DE, bag, slow sand)	High	Prevent high turbidity raw water from exceeding treatment plant capability.	Unique for each system.
UV disinfection			
UV Intensity	Low, or complete outage	Ensure adequate UV lamp output to provide the required dose	Unique for each system, based on validated range for the UV reactor
UV dose	Low	Ensure reactors are providing the minimum required dose	
UV transmittance	Low	Confirm operation within the validated range for the reactor	
Lamp breakage[1]		Limit mercury release (triggers lamp breakage response plan)	
Flowrate	High	Ensure reactor not operated above the maximum approved flowrate	

[1] Parameters monitored to detect lamp breakage vary by system.

References

ANSI/AWWA G100-17, Water Treatment Plant Operation and Management.

AWWA G200-15, Distribution System Operation and Management.

AWWA G400-09, Utility Management System.

AWWA Manual M6, Water Meters-Selection, Installation, Testing and Maintenance.

AWWA Manual M33, Flowmeters in Water Supply.

Deem, S. & Feagin, N., 2016. "Disinfection Data Integrity in Washington State." *Journal AWWA,* 108:10:24, http://dx/doi/org/10.5942/jawwa.2016.108.0162.

Deem, S. & Feagin, N., 2014. "A Turbidity Data Verification Project in Washington." *Journal AWWA* 106:12:32, http://dx/doi/org/10.5942/jawwa.2014.100.0162.

Engelhardt, T. & Malkov, V., 2015. "Plumbing Sample to a Process Analyzer." Chlorination, Chloramination and Chlorine Measurement, Appendix C. Hach Company, Loveland.

Incontri, Joe. "Flow Data Red Flags: When to Act." *Water Online,* December 20, 2017.

Malkov, Vadim B. et. al., 2009. "Comparison of On-line Chlorine Analysis Methods and Instrumentation Built on Amperometric and Colorimetric Technologies. Proceedings, AWWA Water Quality Technology Conference & Exposition (Nov. 15–19, 2009), Seattle, Wash.

Standard Methods for the Examination of Water and Wastewater, 2012 (22nd ed.). APHA, AWWA, and WEF, Washington.

USEPA (US Environmental Protection Agency), 1999. Alternative Disinfectants and Oxidants Guidance Manual. USEPA, Washington.

USEPA (US Environmental Protection Agency), 1991. Guidance Manual for Compliance with the Filtration and Disinfection Requirements for Public Water Systems Using Surface Water Sources. USEPA, Washington.

USEPA (US Environmental Protection Agency), 2005. Membrane Filtration Guidance Manual. USEPA, Washington.

USEPA (US Environmental Protection Agency), 2017. Method 150.3: Determination of pH in Drinking Water. USEPA, Washington.

USEPA (US Environmental Protection Agency), 2009. Method 334.0: Determination of Residual Chlorine in Drinking Water Using an On-line Chlorine Analyzer. USEPA, Washington.

USEPA (US Environmental Protection Agency), 2004. Preventative Maintenance Card File for Small Public Water Systems Using Ground Water. USEPA, Washington.

USEPA (US Environmental Protection Agency), 2006. Ultraviolet Disinfection Guidance Manual for the Final Long Term 2 Enhanced Surface Water Treatment Rule. USEPA, Washington.

USEPA (US Environmental Protection Agency), 2019. Generating High-Quality Turbidity Data in Drinking Water Treatment Plants to Support Optimization and Monitoring. USEPA, Washington.

Van Arsdel, John H., 2017. "Accurate Water Audits Require Accurate Master Meter Calibration and Testing." *Opflow* 43:2. American Water Works Association, Denver.

WSDOH, 2019. "Appendix I: Ultraviolet Disinfection for Drinking Water Applications," Water System Design Manual. Washington State Department of Health, Olympia, WA.

WSDOH, 2019. Treatment Optimization Program, Washington State Department of Health, Olympia, WA.

WSDOH, 2014. "When an institutional building becomes a water system," Washington State Department of Health, Olympia, WA.