Recommended Standards and Guidance for Performance, Application, Design, and Operation & Maintenance

Gravelless Distribution Products

December 2013

Washington State Department of Health

Recommended Standards and Guidance for
Performance, Application, Design, and Operation & Maintenance

Gravelless Distribution Products

December 2013

For information or additional copies of this report contact:
Wastewater Management Section
Physical address: 243 Israel Road SE, Tumwater, WA 98501
Mailing address: PO Box 47824, Olympia, WA 98504-7824

Phone: 360.236.3330
FAX: 360.236.2257
Webpage: www.doh.wa.gov/wastewater
Email: wastewatermgmt@doh.wa.gov

John Wiesman
Secretary of Health

To request this document in another format, call 1-800-525-0127. Deaf or hard of hearing customers, please call 711 (Washington Relay) or email civil.rights@doh.wa.gov.

Para solicitar este documento en otro formato, llame al 1-800-525-0127. Clientes sordos o con problemas de audición, favor de llamar al 711 (servicio de relé de Washington) o enviar un correo electrónico a civil.rights@doh.wa.gov.

DOH 337-005

Contents **Page**

Introduction **6**

1. Performance Standards **11**

1.1. Listing 11
1.2. Performance Criteria 11

2. Application Standards **12**

2.1. Permitting 12
2.2. General Conditions 13
2.3. Soil Conditions 13
2.4. Minimum Land Area / Drainfield Area Requirements 14
2.5. Influent Wastewater Characteristics 14
2.6. Installation 14

3. Design Standards / Proprietary Products **15**

3.1. Relative Design Standards 15
3.2. Specifications for Gravel-Substitute Media 15
3.3. Vertical Separation, Treatment, and Distribution Requirements 16
3.4. Drainfield Depth .....
3.5. Primary and Reserve SSAS Area Sizing 16
3.6. Monitoring Ports 16
3.7. Other Design Elements 16

4. Operation and Maintenance Standards **20**

4.1. Management .....
4.2. Operation and Maintenance .....
4.3. Observed Conditions / Actions .....

Appendix A - Tables **22**

Table 1. Gravity Distirubtion Trench Void Volumes 23
Table 2. Pressure Distribution Trench Void Volumes 24
Table 3. Infiltrative Surface 23
Table 4. Gravelless Chamber Drainfield Sizing 24

Glossary of Terms: A glossary of common terms for all RS&Gs can be found on the DOH Web site at www.doh.wa.gov/Portals/1/Documents/Pubs/337-028.pdf.

Preface

The recommended standards contained in this document have been developed for statewide application. Regional differences may, however, result in application of this technology in a manner different than it is presented here. In some localities, greater allowances than those described here may reasonably be granted. In other localities, allowances that are provided for in this document may be restricted. In either setting, the local health officer has full authority in the application of this technology, consistent with Chapter 246-272A WAC and local jurisdictional rules. If any provision of these recommended standards is inconsistent with local jurisdictional rules, regulations, ordinances, policies, procedures, or practices, the local standards take precedence. Application of the recommended standards presented here is at the full discretion of the local health officer.

Local jurisdictional application of these recommended standards may be:

1) **Adopted as part of local rules, regulations or ordinances -** When the recommended standards, either as they are written or modified to more accurately reflect local conditions, are adopted as part of the local rules, their application is governed by local rule authority.

2) **Referred to as technical guidance in the application of the technology -** The recommended standards, either as they are written or modified to more accurately reflect local conditions, may be used locally as technical guidance.

Application of these recommended standards may occur in a manner that combines these two approaches. How these recommended standards are applied at the local jurisdictional level remains at the discretion of the local health officer and the local board of health.

The recommended standards presented here are provided in typical rule language to assist those local jurisdictions where adoption in local rules is the preferred option. Other information and guidance is presented in text boxes with a modified font style to easily distinguish it from the recommended standards.

Glossary of Terms: A glossary of common terms for all RS&Gs can be found on the department webpage at www.doh.wa.gov/Portals/1/Documents/Pubs/337-028.pdf

The recommended standards contained in this document have been primarily written to support the application of on-site sewage systems with design flows less than 3500 gpd, but may also be applied to large on-site sewage systems (LOSS).

With the adoption of the revised LOSS rule, chapter 246-272B WAC, in 2011, some provisions of the RS&Gs may not be appropriate or allowed for LOSS. Many applicable requirements from the RS&Gs have already been included in the LOSS rule. Design engineers and others interested in LOSS are directed to consult the rule and LOSS program staff before or instead of the RS&Gs.

Typical RS&G Organization:

Standards Section	Explanation
Performance	How this technology is expected to perform (treatment level and function).
Application	How this technology is to be applied. This section includes conditions that must be met prior to proceeding with design. Topics in this section describe the "approved" status of the technology, component listing requirements, permitting, installation, testing and inspection requirements, etc.
Design	How this technology is to be designed and constructed (includes minimum standards that must be met to obtain a permit).
Operation and Maintenance	How this technology is to be operated and maintained (includes responsibilities of various parties, recommended maintenance tasks and frequency, assurance measures, etc).
Appendices	Design examples, figures and tables, specific applications, and design and installation issues, and bibliography.

Introduction

The gravelless distribution products addressed in these standards represent several different types: pipe, chamber, gravel-substitute, and geocomposites. While the specifics of these types differ, their purpose is the same: meet (or exceed) the characteristics and function of gravel in a gravel-filled subsurface absorption system (SSAS). In a gravel-filled drainfield the gravel is:

- non-deteriorating;
- provides void space (for the passage and temporary storage of septic tank effluent);
- presents an interface with the infiltrative surface—trench bottom and side-wall soil—(for absorption of the wastewater); and,
- maintains the integrity of the excavation, supporting the soil back-fill and cover.

A gravelless drainfield can be advantageous when gravel is either unavailable, expensive, or where site conditions make moving gravel about difficult or time consuming. In addition to these benefits, the use of gravelless distribution products addresses some of the concerns presented with gravel. Among these are:

- The detrimental effect of gravel impacting and compressing the infiltrative surface when dumped into the drainfield trench from the front-end loader of a backhoe, which may lower the infiltrative capacity of the soil.
- If the quality of the gravel washing process is poor, the silt particles remaining on the surface of the gravel may be washed off when the drainfield is placed into use, resulting in a silt layer on the infiltrative surface and thereby reducing its infiltrative capacity.
- The damaging effect that the transportation of gravel across yards can have on lawns, flowerbeds, shrubs, etc. and the reduced air transport to the infiltrative surface from compacted soils, all due to the weight of the material and the size of the heavy equipment needed to effectively move it from the stock pile to the drainfield area.

Gravelless Drainfields - In addition to not using gravel, gravelless drainfields differ from the gravel-filled drainfields in the following ways:

Gravelless Pipe - Pipe-based gravelless drainfields are currently available in two approaches: single-pipe, and multiple-pipe.

Single-pipe gravelless drainfields - (see Figure 1a)

- Large diameter pipe is used (typically 8"-10" I.D., 10"-12" O.D.).
- The pipe is wrapped in a layer of geotextile material.
- The excavated trench is typically less than 24" wide (15"-18").
- Serial distribution (drop boxes or crossovers) is more commonly used than parallel distribution (distribution boxes).

Figure 1a. Typical Single-pipe Gravelless Drainfield, Cross-Section

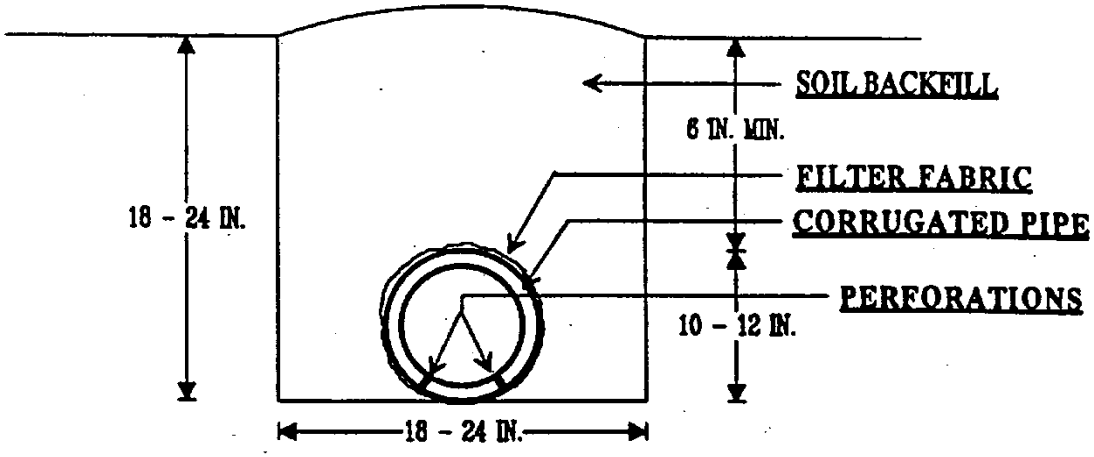

Multiple-pipe gravelless drainfields - (see Figure 1b)

- Medium diameter pipe is used (typically 4”- 4.5” O.D.)
- Pipe, in ten-foot lengths, is typically bundled in groups of 3 or 5 pipes.
- Bundles of pipe are grouped in various configurations to accommodate different widths and depths of trenches or beds.
- One of the pipes in the bundle is designed and designated for end-to-end connection to facilitate distribution of wastewater throughout the drainfield trench or bed.

Figure 1b. Typical Multiple-pipe Gravelless Drainfield, Cross-Section

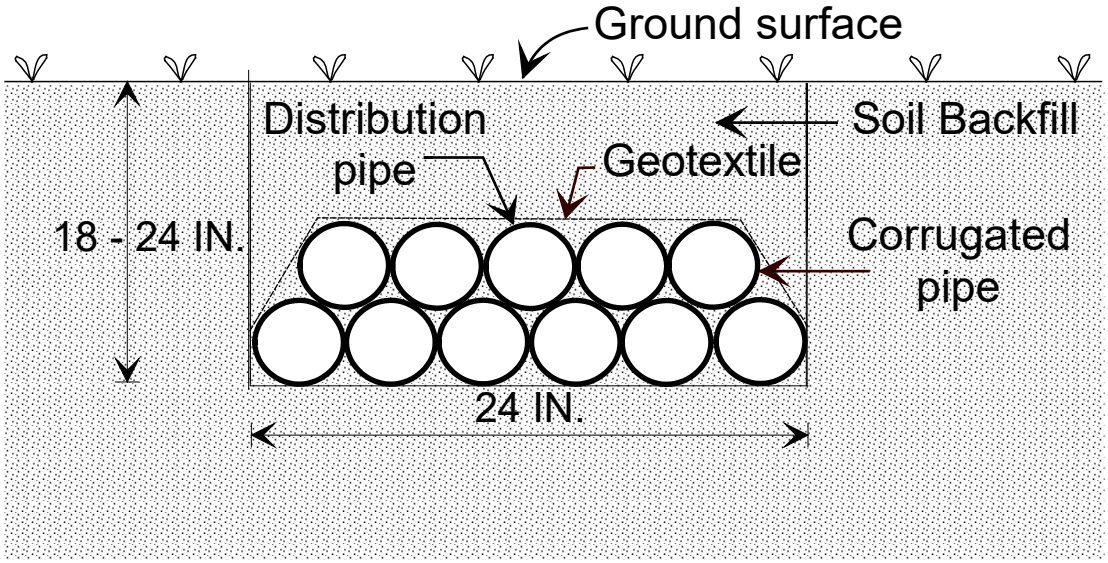

Gravelless Chambers - (see Figure 2)

- Molded chambers, of various dimensions, are used. The chambers replace the gravel-supported void space with chamber-supported void space. The trench, or bed, bottom infiltrative surface is fully exposed, sidewalls are generally louvered, and the top is generally solid.

- The chambers are placed, connected end-to-end, in the bottom of the trench (and placed side-by-side in a bed) and backfilled with native material (or as otherwise directed by the manufacturer depending upon soil conditions).

- At each end of each drainfield chamber line, solid end plates are installed for structural support and as a barrier to soil backfill.

- The use of a geotextile barrier between the chamber and the soil backfill varies from manufacturer to manufacturer and model to model (depending upon sidewall louver design), and the type of soil in which the drainfield is installed.

Figure 2. Typical Gravelless Chamber Drainfield, Cross-Section

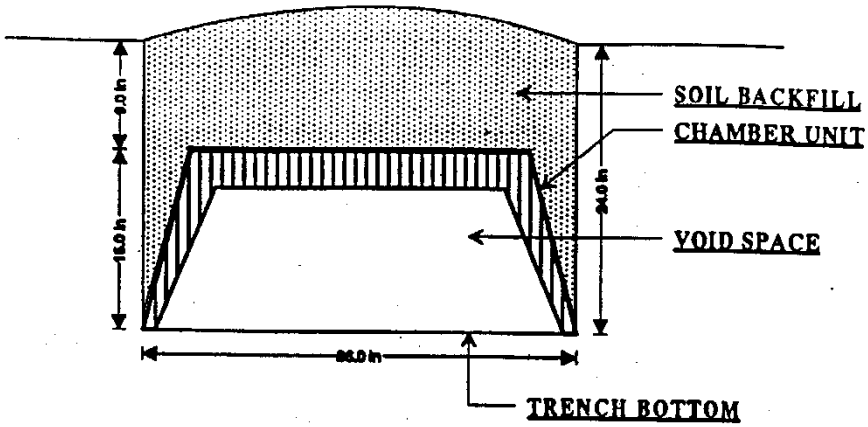

Gravel-substitute - (see Figure 3)

- Of the different types of gravelless distribution products, gravel-substitute drainfields are the most similar to gravel-filled drainfields.
- Substitute media may be loose, or contained in bundles that are held together with netting for ease of installation and/or as an element of design.
- The particular shape and configuration of the substitute media may provide additional void space within the trench or bed depending on how the units are placed and the depth and width of the drainfield trench.

Figure 3. Examples of Gravel Substitute Drainfields

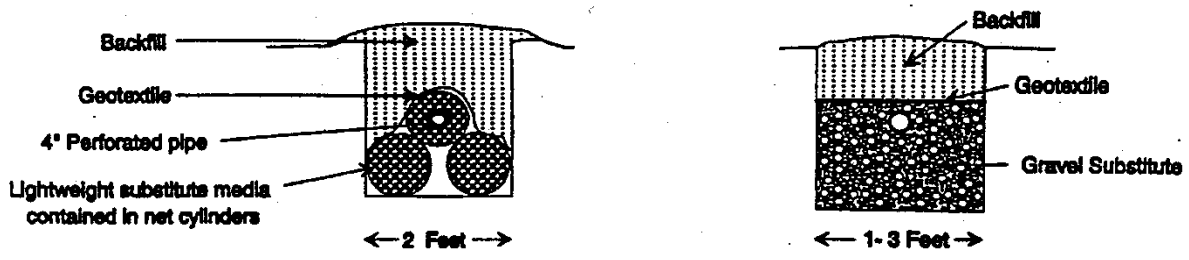

Geocomposites - (see Figure 4)

- Drainfield void space is created by the assembly of multiple layers of geogrid and geotextile bundled together in size and shape to facilitate handling and placement.
- Structural integrity is imparted by the design and material elements of the geocomposites.
- Geocomposite drainfields may incorporate a layer of sand media between the geogrid/geotextile bundle and the bottom and sides of the drainfield trench or bed.
- An effluent distribution pipe is placed on top of the geogrid / geotextile bundles.
- A geotextile material is placed on top of the geocomposite drainfield as a barrier to soil backfill infiltration.

Figure 4. An Example of a Geocomposite Drainfield

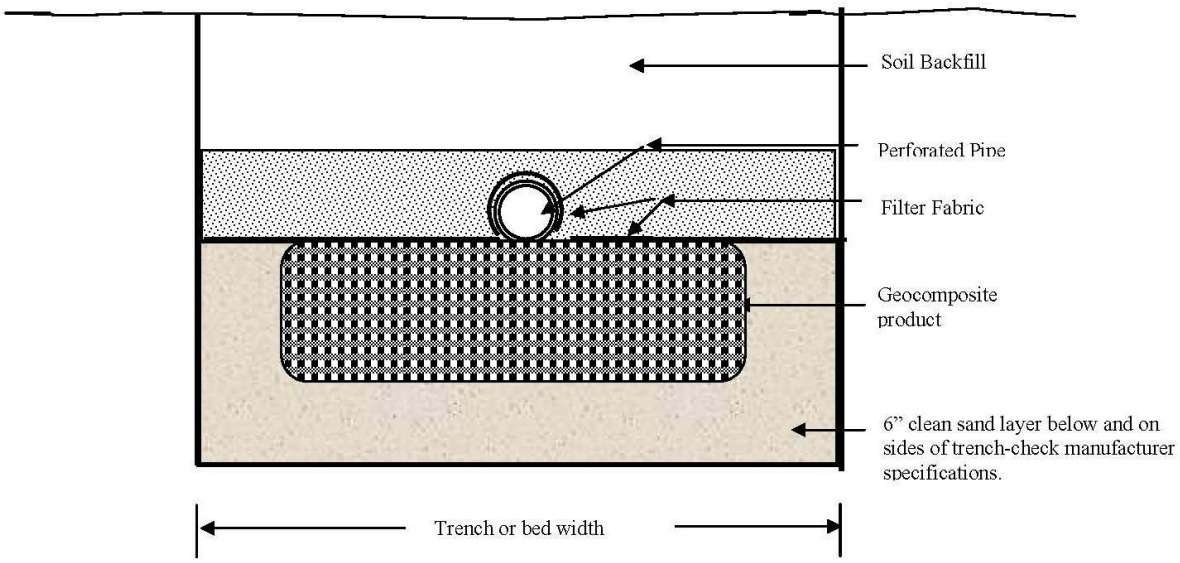

1. Performance Standards

1.1. Listing

1.1.1. Department of Health (the department) reviews and lists proprietary gravelless distribution products when the manufacturer or designated manufacturer representative demonstrates that the product meets or exceeds the performance criteria in WAC 246-272A-0140 and in subsection 1.2 of this document.

1.1.2. Before a local health jurisdiction may issue a permit for an on-site sewage system incorporating a gravelless drainfield, the specific brand and model must be included on the current List of Registered On-site Treatment and Distribution Products.

1.2. Performance Criteria

Gravelless distribution products shall have, at least equal to that provided by gravel in a gravel-filled drainfield, the following attributes:

1.2.1. Be constructed or manufactured from materials that are non-decaying and non-deteriorating and do not leach chemicals when exposed to sewage and the subsurface soil environment;

1.2.2. Provide liquid storage volume at least equal to the storage volume provided within the thirty percent void space of a drainrock-filled distribution system. This storage requirement must be established by the gravelless distribution products, system design and installation and must be maintained for the life of the system. This requirement may be met on a lineal-foot or on an overall system design basis.

1.2.2.1. For gravity flow systems, provide liquid storage volume at least equal to the storage volume provided within the thirty percent void space in a twelve-inch layer of drainrock in a drainrock-filled distribution system. See Table 1 for gravity distribution trench void volumes;

1.2.2.2. For pressure distribution systems, provide liquid storage volume at least equal to the storage volume provided within the thirty percent void space in a nine-inch layer of drainrock in a drainrock-filled distribution system. A pressure distribution trench has a minimum depth of 9” due to the difference in pipe diameters. See Table 2 for pressure distribution trench void volumes;

1.2.3. Provide suitable effluent distribution to the infiltrative surface at the soil interface; and

1.2.4. Maintain the integrity of the trench or bed. The material used, by its nature and its manufacturer-prescribed installation procedure, must withstand the physical forces of the soil sidewalls, soil backfill and the weight of equipment used in backfilling.

2. Application Standards

2.1. Permitting

2.1.1. Permitting and installation of gravelless distribution products are subject to local and state code.

2.1.2. Only proprietary gravelless distribution products registered with the department and listed in the current List of Registered On-site Treatment and Distribution Products may be permitted by local health jurisdictions [WAC 246-272A-0145]. Only the specific models listed in the document are approved. If other models in a manufacturer's product-lines do not appear on the list, they are not approved for use in Washington State. If in doubt, contact the department for current listing information.

2.1.3. Permit Requirements - The local health agency installation permit (and operational permit, depending on local code) must at least specify, among other items normally required within the specific local health jurisdiction, the following items:

2.1.3.1. System operating capacity and design flow (gallons/day) for the facility served.

2.1.3.2. The soil type (textural class number) at the site.

2.1.3.3. The soil dispersal component hydraulic loading rate (gallons/ft^2/day) matched to the soil type and conditions.

2.1.3.4. The drainfield size required (square feet) if a gravel-filled drainfield were to be used.

2.1.3.5. The size of the proposed gravelless drainfield (square feet) with percent reduction, if used.

2.1.3.6. The frequency of gravelless drainfield status observations.

2.1.3.7. The requirements for drainfield expansion, repair, or replacement in event of observed problems. (See Section 4.3 for possible outcomes of observed ponding conditions.)

The selection of an appropriate wastewater-to-soil loading rate, anticipated facility use, wastewater generation, installation, operation of the system, and ongoing maintenance inspections are critical to the treatment performance of the drainfield and the length of time that treatment performance is achieved. Gravelless drainfield manufacturers commonly encourage the use of their products in reduced configurations when compared to gravel-filled drainfields. While this approach may be satisfactory due to unique elements of the product designs, these smaller drainfields may impact the life of the drainfield. Drainfield performance over the long-term (20 – 30 years) needs to be observed and analyzed as additional field experience with these systems is gained.

2.2. General Conditions

Gravelless distribution products may be used:

2.2.1. In applications and locations where soil and other site conditions are suitable for a septic tank and drainfield system.

2.2.2. In conjunction with approved treatment systems, such as sand filters or aerobic treatment units, that may provide effluent quality sufficient for gravelless distribution products to be used on sites not otherwise suitable for a septic tank and drainfield.

2.2.3. Where soil types and depths, setbacks, and other site evaluation and location requirements found in subsections -0210, -0220, -0280, and -0320 of WAC 246-272A are satisfactorily met.

2.2.4. Incorporating any combination of the following design elements:

2.2.4.1. Gravity-flow distribution;

2.2.4.2. Pressurized distribution;

2.2.4.3. Drainfield dosing; and,

2.2.4.4. Alternating drainfields.

2.2.5. In mounds, intermittent sand filters, and recirculating gravel filters in lieu of gravel-filled trenches or beds.

2.3. Soil Conditions

2.3.1. Gravelless distribution products may be used in Soil Type 1 provided that the treatment and distribution requirements of WAC 246-272A-0230 (Table VI) and 0280 (Table IX) are satisfied.

2.3.2. In Soil Types 4 (except fine sands) 5, and 6, gravelless distribution products must be used in a trench configuration not to exceed 3 feet wide. In Soil Types 1, 2, 3, and in fine sands, gravelless distribution products may be used in a bed configuration with a maximum bed width of 10 feet. (WAC 246-272A- 0234(3)(c))

2.4. Minimum Land Area / Drainfield Area Requirements

2.4.1. The use of a gravelless drainfield does not provide for a reduction in the minimum land area requirements established in WAC 246-272A-0320. Site development incorporating gravelless distribution products must meet the minimum land area requirements established in state and local codes.

2.4.2. The drainfield area proposed for an on-site sewage system using gravelless drainfield products must provide for each drainfield (the initial and replacement) an area equal to 100% the size of a gravel-filled drainfield (WAC 246-272A-0210 (5)(c) and WAC 246-272A-0210-0234(8).

2.5. Influent Wastewater Characteristics

2.5.1. Wastewater from residential sources must receive treatment at least equal to that provided in a two-compartment septic tank, before discharge to a gravelless drainfield.

2.5.2. Wastewater from non-residential sources or, high-strength wastewater from residential sources must receive treatment sufficient to lower the waste-strength to the level of that commonly found in domestic residential septic tank effluent before discharge to a gravelless drainfield.

2.6. Installation

2.6.1 Drainfields using gravelless distribution products must be installed according to the manufacturer's instructions, in a manner that is consistent with these standards and with state and local rules. If the manufacturer's instructions and these standards are in conflict, the matter must be discussed with, and decided by, the local health officer.

2.6.2. Areas where unique drainfield site conditions exist may warrant special installation requirements, such as for installations in very fine, uniform sands or in significant ground burrowing animal’s areas. Check with the gravelless distribution product manufacturer for condition-specific recommendations on proper installation techniques to address unique site conditions.

3. Design Standards / Proprietary Products

Gravelless distribution technologies are, for the most part, proprietary. As such, other than the Performance Criteria identified in Section 1.2, there are few specific design requirements for the manufactured products.

3.1. Relative Design Standards

There are, however, design standards relative to:

3.1.1. The required vertical separation and the method of wastewater distribution;

3.1.2. Certain soil types and required use of pressure distribution;

3.1.3. Certain soil types and treatment levels as required in WAC 246-272A-0230 and -0280;

3.1.4. The minimum depth of gravelless drainfield trench; and

3.1.5. The size of the gravelless drainfield.

3.2. Specifications for Gravel-Substitute Media

3.2.1. Gravel substitute media must be in the same size range as gravel (3/4" to 2½").

3.2.2. Gravel substitute must be nondecaying and nondeteriorating, and do not leach chemicals when exposed to sewage and the subsurface soil environment.

3.2.3. A geotextile material must be placed on top of the gravel substitute media as a barrier to soil backfill infiltration when the gravel substitute product does not have an integrated geotextile cover fabric.

3.2.4. The gravel substitute must provide:

3.2.4.1. a minimum 30% void volume under compression conditions encountered in a soil trench;

3.2.4.2. total void volume per square foot of trench bottom equivalent to, or greater than, that in a drainrock-filled trench; and

3.2.4.3. void volume at least equal to the storage volume provided within the thirty percent void space in a twelve-inch layer of drainrock in a gravity flow drainrock-filled system. See Table 1 for gravity distribution trench void volumes. See Table 2 for pressure distribution trench void volumes. In jurisdictions where more than 12 inches of gravel depth is required, additional calculation may be necessary to assure comparable void volume.

3.3. Vertical Separation, Treatment, and Distribution Requirements

The requirements of WAC 246-272A-0230 (Table VI) and -0280 (Table IX) must be satisfied.

3.4. Drainfield Depth

Gravelless distribution products must be installed with a minimum depth of 6 inches of sidewall located in original, undisturbed soil. The infiltrative surface may not be deeper than three feet below the finished grade, except under special conditions approved by the local health officer (see WAC 246-272A-0234).

3.5. Primary and Reserve SSAS Area Sizing

Drainfield sizing in Washington State is based on trench, or bed, bottom area only, except where total annual recharge is less than 12 inches per year. Sidewall infiltration, while it is an acknowledged element of SSAS function, is not considered in terms of drainfield sizing.

3.5.1. Determine the total primary drainfield area required by dividing the daily design flow (in gallons) by the hydraulic loading rate, which varies according to Soil Type (See WAC 246-272A-0234). This will also be the process for determining the total reserve area needed.

3.5.2. Once the primary drainfield area required is determined (square feet of trench or bed bottom area) the total length of trenches or beds can be determined. The lineal amount of gravelless distribution product required to provide the total drainfield area depends on the amount of bottom area infiltrative surface area per lineal foot provided by the gravelless distribution product (see Table 3).

3.5.3. To determine the total length of trenches or beds required divide the total square footage of drainfield required by the amount of infiltrative area per lineal foot of the type of drainfield material selected. For the purpose of drainfield sizing, the following information notes on how the infiltrative area per lineal foot of pipe or gravelless product is calculated for each type of gravelless distribution product:

3.5.3.1. **Single-pipe gravelless distribution products -** equivalent to the outside diameter of the pipe.

3.5.3.2. **Multiple-pipe gravelless distribution products -** equivalent to the outside dimensional width of the bottom layer of pipe bundle(s) in contact with the bottom of the trench or bed.

3.5.3.3. **Gravelless chamber drainfields / sizing standard -** equivalent to the outside dimensional width of the chamber in contact with the bottom of the trench or bed. See the Registered On-site Distribution Products section of the current List of Registered On-site Treatment and Distribution Products for gravelless chamber product external dimensions sizing information.

- **Sizing Alternative A (more conservative than the sizing standard)**: equivalent to the actual exposed interior dimensional width of the chamber at the trench or bed bottom, not the exterior dimension, nominal size or product marketing description.

- **Sizing Alternative B (less conservative than the sizing standard)**: equivalent to the bottom width of trench or bed. The outside dimensional width of the chamber in contact with the bottom of the trench or bed must measure at least 90% of the trench or bed width (see Table 4).

3.5.3.4. **Gravel substitute drainfields** - equivalent to the width of bottom of the trench or bed covered by the gravel substitute.

3.5.3.5. **Geocomposite drainfields** - equivalent to the outside dimensions of the bundle(s) in contact with the bottom of the trench or bed. If a sand layer is required between the geocomposite and the infiltrative surface at the bottom of the trench or bed, by the manufacturer, the infiltrative area per lineal foot is equal to the outside bottom dimensions of the bundle(s) in contact with the sand layer.

Gravelless Chamber Drainfield Sizing
The sizing standard for gravelless drainfields based on the external dimensions of the chambers, along with the two other Alternatives presented in Section 3.5.4.3 represent the range of sizing approaches considered and endorsed by the TRC since Fall 2002. Local Health Jurisdictions choose to apply the sizing criterion that is best for their jurisdiction from the sizing standard of chambers or the two sizing alternatives below:

- *Apply the sizing standard presented in 3.5.4.3 Drainfield Sizing, concluding that sizing gravelless chamber drainfields on the external dimension of the chamber may be the best approach, balancing the primary technical merit of chambers (open area) with the ease of identifying trench bottom infiltrative area by simple measure of the external width dimension. For gravelless chamber product sizing information based on the external dimensions of chambers, see the Registered On-site Distribution Products section of the current* ***List of Registered On-Site Treatment and Distribution Products****, or*
- *Apply the more conservative Alternative A recalling that the allowance of drainfield size reductions for gravelless chamber systems rests with the manufacturer-described technical merit of unobstructed infiltrative surface exposure on the trench bottom under the interior of the chamber, or*
- *Apply the less conservative Alternative B acknowledging the amount of exposed trench bottom surface area provided compared to standard gravel-filled trenches.*

Product Manufacturer / System Designer Responsibilities *- When gravelless drainfield manufacturers promote, and on-site sewage system designers integrate in their client's sewage systems, reduced-size drainfields they share with the system owner the responsibility for satisfactory long-term function of the drainfield. It is not necessarily acceptable design practice to apply reduced-size gravelless drainfields in all soils, sites, or applications simply because the manufacturer's literature suggests, or the local and state minimum codes may allow, use of gravelless drainfield products in this manner.*

3.5.4. Reduced drainfield sizing criteria for gravelless drainfields - As noted in this document's introduction, gravelless distribution products have identifiable benefits when compared to using gravel. Various types of gravelless distribution products also have specific design attributes that may provide options to the design professional.

When proposing the use of a gravelless distribution product in a SSAS, the design professional and the local health jurisdiction may choose to install less than 100% of the primary SSAS. This choice applies to the following types of gravelless distribution products:

- *Chamber drainfields*
- *Gravel-substitute drainfields*
- *Geo-composite drainfields*

3.5.5. Reductions may not be combined with any other size reduction (see Section 3.5.6.3). The primary and reserve (or initial and replacement) SSAS areas shall be sized to at least 100% of the hydraulic loading rates noted in Table VIII of WAC 246-272A-0234.

3.5.6. With 100% of the area required for a gravel-filled drainfield established and dedicated (for initial and replacement fields) reduced-size gravelless drainfields may be designed and installed. System design, layout, and installation must be done in a manner easily facilitating the installation of additional gravelless drainfield if future conditions necessitate such action. For systems using pressure distribution, if additional drainfield is needed in the future, elements of the system (such as the pump or controls) may need to be modified in order to meet the hydraulic performance requirements of pressure distribution throughout the expanded drainfield system.

3.5.6.1. Drainfield size reductions allowed varies according to soil types, as follows:

Soil Types 1:	No Reduction Allowed
Soil Types 2:	Up to 20% Reduction Allowed
Soil Types 3 through 6:	Up to 40% Reduction Allowed

3.5.6.2. When a gravelless distribution product is used in a treatment component, such as an intermittent sand filter, and media is g used to meet a treatment level, no size reduction can be taken for the treatment component.

3.5.6.3. Combining Drainfield Size Reduction Allowances - drainfield size reductions for gravelless distribution products may not be combined with drainfield size reductions based on effluent quality.

Until more long-term experience applying reduced-size gravelless drainfields is gained, it remains imperative that long-term drainfield function and public health protection is assured by implementing the following:

- *Full drainfield areas for the initial and replacement area [providing full suitable area for expansion and replacement of the drainfield if needed. See WAC246-272A-0234(8) and 272A-0210(5)(c)].*
- *Strategically placed observation ports in each drainfield line to observe the infiltrative surface conditions and ponding levels within the drainfield.*
- *Regular observation of the drainfield to assure timely identification of pending problems in a timeframe that allows corrective action before public health is placed at risk due to a drainfield failure.*
- *System owner awareness of the potential for size-related drainfield issues, both in terms of needed diligence to Operation and Maintenance (O&M) and cost-of-repair issues.*

- *When choices are made regarding what type of drainfields to install, and how much drainfield to install, the choices must be well considered, intentional decisions made by both the designer and the on-site sewage system owner.*

3.6. Monitoring Ports

The installation of monitoring ports in gravelless drainfields is for the purpose of monitoring system status and aiding in problem analysis. To be effective they must be installed in a representative location on each drainfield line. Some lines may require additional monitoring ports to achieve observations representative of the entire drainfield line. Well-designed and installed monitoring ports:

- Extend to at least the ground surface of the final landscape grade surface;
- Are firmly anchored so as to prohibit unauthorized removal;
- Are accessible for routine observation;
- Are secured or otherwise protected from accidental or unauthorized access; and
- Provide visual access to the trench-bottom in the gravel portion of a gravel-filled drainfield and, in gravelless drainfields:
  - ☑ Single-Pipe: to the interior of the pipe;
  - ☑ Multiple-Pipe: to the infiltrative surface;
  - ☑ Chamber: to the interior of the chamber;
  - ☑ Gravel Substitute: to the infiltrative surface;
  - ☑ Geocomposite: to the infiltrative surface.

3.7. Other Design Elements

Other design features, such as trench separation, maximum lateral lengths, maximum width of trench or bed, minimum depth of soil backfill, cover material, setbacks, etc., must be the same as for other soil dispersal components. (See WAC 246-272A-0234 and WAC 246-272A-0210)

4. Operation and Maintenance

4.1. Management

4.1.1. The local health officer may require a maintenance agreement with supporting legal documents prior to the issuance of approval for a proposed gravelless drainfield. It is recommended that a maintenance agreement be required when, in the opinion of the local health authority, the ongoing operation of the gravelless drainfield is best assured by the existence of such an agreement.

4.1.2. Owner Responsibilities **-** The owner of the residence or facility served by a gravelless drainfield is responsible for assuring proper operation and providing

timely maintenance for all components of the on-site wastewater treatment and soil dispersal system. This includes inspecting the entire system at a frequency appropriate for the site conditions and the type of on-site sewage system as specified by the local health department/district. Assuring that complete evaluations of all system components are provided to determine functionality, maintenance needs and compliance with local regulations and permits are the responsibility of the system owner. Contact the local health department/district for what qualifications are required of a person to perform any specialized monitoring and maintenance activities.

4.2. Operation and Maintenance (O&M)

O&M activities for gravelless drainfields include:

4.2.1. Keeping the flow of sewage to the drainfield at or below the approved operating capacity and sewage quality.

4.2.2. Assuring that no surface water collects on the drainfield site.

4.2.3. Assuring that surface drainage, and direct drains, such as footing or roof drains are directed away from the area where the drainfield is located.

4.2.4. Protecting the drainfield area from damage by soil compaction, for example by vehicular or livestock.

4.2.5. Protecting the drainfield area from cover by structures or by impervious material.

4.2.6. Protecting drainfield area from damage by soil removal and grade alteration.

4.2.7. Maintaining a suitable, non-invasive shallow-rooted vegetative cover over the drainfield site.

4.2.8. Checking monitoring ports for ponding: conditions in the monitoring ports must be observed and recorded during all operation and maintenance activities.

4.2.9. Maintain a written chronological record of drainfield ponding level observations and operation and maintenance activities. If the system uses pressure distribution or other means of system dosing, the person monitoring the system needs to be aware of the impact of dose frequency on observed ponding level.

4.2.10. Servicing all system components as needed, including product manufacturer's requirements / recommendations for service.

4.3. Observed Conditions / Actions

4.3.1. When a system evaluation or any other observation reveals either of the following listed conditions, the owner of the system must take appropriate action to correct the situation according to the direction and satisfaction of the local health officer.

4.3.1.1. System failure; as defined in WAC 246-272A-0010; or,

4.3.1.2. A history of long-term, continuous and increasing ponding of wastewater within the gravelless drainfield of such magnitude that if left unresolved, will probably result in gravelless drainfield failure.

4.3.2. Appropriate actions may include:

4.3.2.1. Evaluation of building usage for a change in wastewater quality or quality, or other conditions that could be causing the observed gravelless drainfield ponding or failure.

4.3.2.2. Repair or modification of the gravelless drainfield.

4.3.2.3. Expansion of the gravelless drainfield.

4.3.2.4. Modifications or changes within the structure relative to wastewater strength or hydraulic flow.

Local permits must be obtained before system construction begins, according to local health jurisdiction requirements. Any observed problem, repair or modification activity must be reported as part of the monitoring activity for the site. For on-site sewage systems with a reduced-size gravelless drainfield the repair or modification required may include the installation of additional gravelless drainfield to enlarge the drainfield to 100% of the initial (gravel-filled) design size. Repair or modification is not limited to this option.

Appendix A - Tables

Table 1. Gravity Distribution Trench Void Volumes[1, 2]

Drainfield Trench (gravel portion)	Volume (Gross) V_g (in ft^3)	Volume (4.5" O.D. Pipe) $V_{4.5"}$ (in ft^3)	Volume (Net) $V_N = V_g - V_{4.5"}$ (in ft^3)	% Void Volume $VV_{\%}$ (in ft^3)	Total Void Volume $VV_T = V_N \times V_{\%} + V_{4.5"}$ (in ft^3)
12" (H) x 30"(W) x 12"(L)	1' x 2.5' x 1' = 2.5	(πr^2 x 12") / 1728 = 0.11	2.39	(washed drainrock) at least 0.30	2.39 x 0.30 +0.11 = 0.83
12" (H) x 36"(W) x 12"(L)	1' x 3' x 1' = 3	(πr^2 x 12") / 1728 = 0.11	2.89	(washed drainrock) at least 0.30	2.89 x 0.30 + 0.11 = 0.98

[1] Assumes a 1 foot depth of gravel and a 4 inch diameter distribution pipe.

[2] Gravel-filled drainfields typically consist of a level trench (3 ft. wide) or bed (>3 ft. <10 ft. wide) with 6 to 12 inches of gravel placed on the bottom. A gravity flow distribution network consisting of 4-inch diameter perforated plastic pipe is located on this layer of gravel. Additional gravel is placed over the pipe to a level 2 inches above the pipe. The gravel is then covered with a layer of geotextile material and the trench is backfilled with native soil material.

Table 2. Pressure Distribution Trench Void Volumes [1, 2]

PD Drainfield Trench (gravel portion)	Volume (Gross) V_g (in ft^3)	Volume (1.315" O.D. Pipe) $V_{1.315"}$ (in ft^3)	Volume (Net) $V_N = V_g - V_{1.315}$ (in ft^3)	% Void Volume $VV_{\%}$ (in ft^3)	Total Void Volume $VV_T = V_N \times V_{\%} + V_{1.315"}$ (in ft^3)
9" (H) x 30" (W) x 12"(L)	0.75' x 2.5' x 1' =1.875'	(πr^2 x 12") / 1728 = 0.009	1.87	(washed drainrock) at least 0.30	1.87 x 0.30 + 0.009 = 0.57
9" (H) x 36" (W) x 12"(L)	0.75' x 3' x 1' = 2.25'	(πr^2 x 12") / 1728 = 0.009	2.24	(washed drainrock) at least 0.30	2.24 x 0.30 + 0.009 = 0.68

[1] Assumes a 9 inch depth of gravel and a 1 inch diameter distribution pipe.

[2] Gravel-filled pressure distribution drainfields typically consist of a level trench (3 ft. wide) or bed (>3 ft. <10 ft. wide) with 6 inches of gravel placed on the bottom. A pressure distribution network consisting of 1-inch diameter plastic distribution pipe with orifices, is located on this layer of gravel. Additional gravel is placed over the pipe to a level 2 inches above the pipe. The gravel is then covered with a layer of geotextile material and the trench is backfilled with native soil material.

Table 3. Infiltrative Surface[1, 2]

Drainfield Trench (gravel portion)	Infiltrative Surface Per Lineal Foot of Trench	
	Bottom Area Only	Bottom Area + 6" sidewall*
12" (H) x 30" (W) x 12"(L)	Two & one-half (2.5) square feet	Three & one-half (3.5) square feet
12" (H) x 36" (W) x 12"(L)	Three (3) square feet	Four (4) square feet
* WAC 246-272A-0234(5): The local health officer may allow the infiltrative surface area in a SSAS to include six inches of the SSAS sidewall height when meeting the required absorption area where total recharge by annual precipitation and irrigation is less than twelve inches per year.		

[1] Assumes a 1 foot depth of gravel and a 4 inch diameter distribution pipe.

[2] Gravel-filled drainfields typically consist of a level trench (3 ft. wide) or bed (>3 ft. <10 ft. wide) with 6 to 12 inches of gravel placed on the bottom. A gravity flow distribution network consisting of 4-inch diameter perforated plastic pipe is located on this layer of gravel. Additional gravel is placed over the pipe to a level 2 inches above the pipe. The gravel is then covered with a layer of geotextile material and the trench is backfilled with native soil material.

Table 4. Gravelless Chamber Drainfield Sizing

(Outside width of chamber at 90% of measured trench width)

For sizing based on a trench width of (inches)	***The measured width of the chamber at the bottom of the trench must be at least (inches)***
36	**32.4**
30	**27.0**
24	**21.6**
18	**16.2**
12	**10.8**